KNEE ACTION SHOCK ABSORBERS

The following information is comprised of my personal experience rebuilding one pair of Chevrolet Front Knee Action shock absorbers from a 1935 Master model. No doubt there are other ways to do it, but this is what worked for me. If you have alternative approaches, additional information, or any comments, e-mail me at autoptic@spinn.net and I will add your information to this article to share with others.

Here is what I discovered;

1. **If you disassemble the unit, the giant shock spring inside will not fly out and punch a hole in your roof!** At least mine did not. In fact, the two small shock absorber springs at the front of the unit (also called "snubber" springs) turned out to be more dangerous than the giant spring inside. The two front springs should be removed carefully as described, for they could fly out and punch you one if you don't duck fast enough. Below is a cross sectional diagram of the unit.

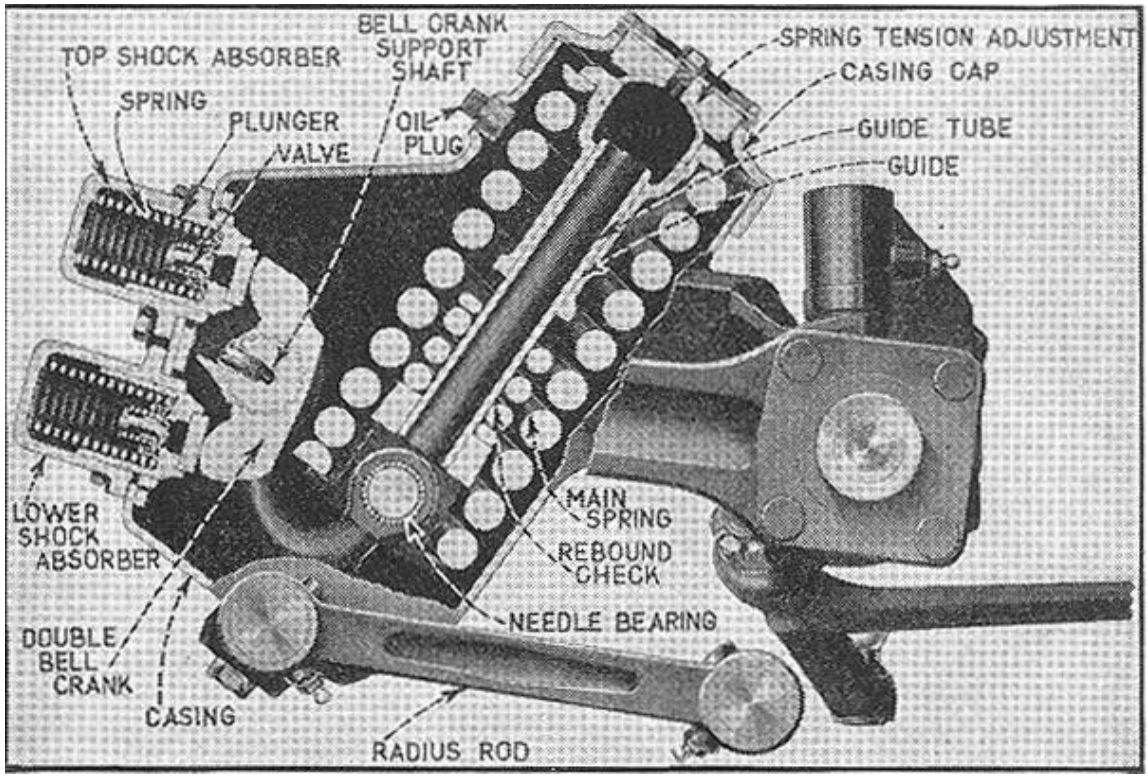

2. **Chances are, the inside of your shock absorber unit is filthy**. This is due to people in the old days refilling leaking units with used motor oil. Also there may be rust in the top of the unit, as the leaky seals would let moisture in, which then condensed on the inside top of the unit not covered with oil. Both of mine were rust free in their nether regions, due to the unit holding fluid down below the seal level…but the inside the tops and shock springs were rusty. Once the unit was gutted and removed from the axle, I clamped it in a vise for additional cleaning, etc. before sending it on to the machinist. It needed a LOT of cleaning, both inside and out. Mine was so caked with old grease and dirt it looked like it had been battered and deep fried. The bottom of the inside was pure sludge. If you clean it all off, and inside too, your machinist will love you.

3. **You will need a machinist, not a mechanic**. My units had needle bearings on each side of the spindle support shaft. The shaft ends and inner housing where they rotate were badly worn on one side. I had them replaced with bushings. Cost was $125 per unit. As it turns out (according to several sources I have contacted) while the 1935-36 models had needle bearings, the 1937-38 models had bushings anyway. So, my machinist glued the bushings into the housing with some type of industrial epoxy only machinists know about, aligned them with a mandrel he made, and fitted the shaft and bushings together. This eliminated the need to machine the inside surfaces of the housing, which contains the needle bearings and was cost prohibitive. He says that those bushings can not be removed, except possibly by applying intense heat to the housing.

4. **Disassembly is required**. The first unit I disassembled I did not remove the top or inner springs, because I thought the spring would fly out and kill me. After the unit was finished and reattached, I removed the second unit and ran into a problem. When I drove the bell crank support shaft out of the unit, the double bell crank arm it slides into (see diagram above), and which contains the set screw (this is the arm which operates the shock absorber springs when the wheel moves up and down) was pushed out of alignment by the pressure of the main shock spring. I could not realign it. Consequently, without disassembling the unit, it was impossible to re-insert the bell crank support shaft, let alone align the bushings. That is why I dared to remove the "guts" of the unit. Consequently, if you are going to rebuild your units, you will probably have to remove the inner workings, not only for cleaning, but to allow alignment of the bushings and re-assembly of the unit.

You can find the seals locally. The seals consist of an "O" ring, a flat rubber or neoprene "washer" and a flat cork washer. You can try **FIVE POINTS CLASSIC AUTO SHOCKS PH: 714-979-0451, FAX: 714-241-3454, Santa Ana, CA** for a seal kit (if they still sell them - I purchased one from them several years ago), or the seals can be "hand made", namely two "O" rings, a rubber and a cork "washer". (They also rebuild them). If you buy a set, you also get soft metal washers for the shock absorber housings.

DISASSEMBLY

(my way)

1. After cleaning the unit off, obviously the wheel must be removed. If possible, you should remove the front fender. My car has not been repainted, so it was no big deal. Leaving the fender on will make the job very difficult. Then remove the wheel bearings, brake drum and brake shoes. All of this follows normal procedures, i.e. you will want to back off the brake shoes and pray that your drums do not have ridges worn in them, etc!

2. Next you can remove the radius rod mounting bracket bolted to the bottom of the unit. The radius rod goes from the bottom of the unit to the wheel backing plate. Chances are the rubber "O" rings that seals it at each end need to be replaced too. (If you are lucky enough to get an old Wholert radius rod kit it may have rubber seals in good condition. Or you can get modern seals from a local seal/gasket company. Also, chances are the radius rod threads, which thread to a large bracket on the backing plate, and also thread to the unit's bracket which you removed, are a little worn. They just move up and down on the threads as the car bounces down the road. NORS radius rods can still be found, but the old ones can be shimmed to, though I think leaving them alone works just as well unless they are really bad. I shimmed mine, until I eventually found some replacements with undersized threads. But frankly the NORS ones don't seem much tighter, so I do not think it is crucial that the arms be replaced. The bracket the arm screws on to is riveted to the backing plate - there also are replacements around for that, but you would need a machine shop to rivet them on. I preferred to leave mine on.)

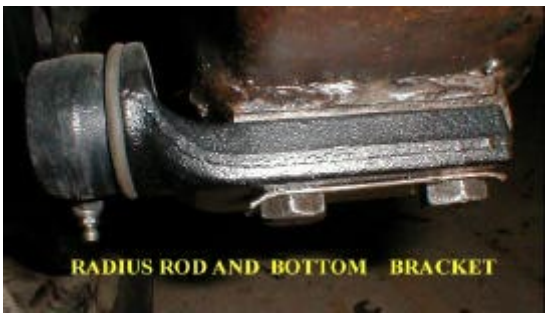

3. Off comes the backing plate, followed by the brake cable assembly, which I could get to by having the brake shoes off. With the radius rod bracket removed from the unit, you can then set the backing plate and shoes aside. There is a cork seal on the back of the backing plate - try not to damage it, unless you plan to replace it. (Helpful Hint: For some reason soaking cork gaskets in phosphoric acid seems to both clean and rejuvenate them. I don't know how long this lasts but mine looked brand new after an all night soak.)

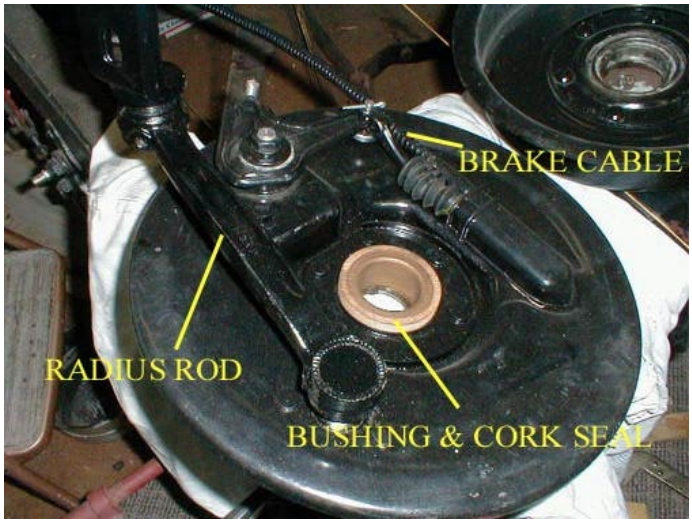

4. Next I removed the radius rod from the backing plate. In order to remove the radius rod from the backing plate I had to remove the nut that holds the brake shoe cam assembly and pull it out, which is why I had removed the brake shoes, etc. This is so the radius rod would clear the cam nut, and I could then "unscrew" the radius rod from its bracket on the backing plate. This doesn't have to be done now, but you will need to remove the radius rod from the backing plate for inspection and cleaning and to replace the "O" ring.

5. You can carefully set the assembly aside so as not to damage your brake cable or hose, or take this opportunity to remove and inspect them. Since my '35 has mechanical brakes, I finally became acquainted with the cable assemblies, which were nearly frozen up (my car is unrestored though in nice condition). No wonder braking was so hard! Needless to say, I finally ended up just rebuilding my entire front end. (Helpful hint: If you have mechanical brakes and need to lubricate your brake cables, instead of filling them with oil which may leak out and get all over the place, I mixed alcohol and graphite and squirted it down inside until it ran out the other end of the cable. The alcohol provided a liquid medium to carry the graphite powder through the cable housing, and then when it

evaporates there is no mess left over. I was going to replace my front cables, but after inspecting them I decided they would be good for another 65 years. I am leaving the new set I bought on Ebay for my descendants. By the way, if you are not registered with Ebay, you are missing out on a GREAT source of parts. Lots of front end parts in fact! You can register from my home page.)

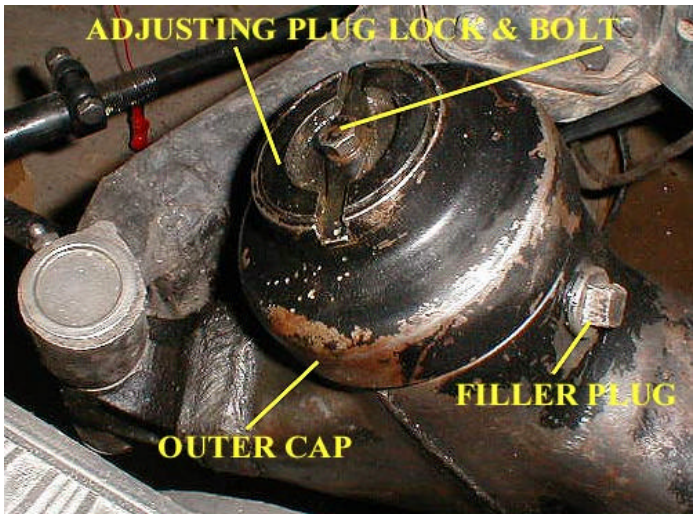

6. With the wheel and drum out of the way, there was the knee action unit in all its glory.

7. It looked formidable, and I was intimidated. I cleaned it some more, then it was time to drain it. Presumably it is not full, as you are rebuilding it because it leaks. To completely drain it, I removed one of the two bottom bolts on the lower shock absorber spring housing. Some fluid dribbled out then. I then inserted tubing inside, and siphoned everything out I could. Why do this now? You don't have to, but after the unit is ready to remove from the axle, chances are you will forget it still has fluid in it and dump it out on your spotless garage floor, and maybe on your shoe like I did.

8. Next I removed the top of the unit and the inner springs. This is so there will not be pressure on the shock absorber arm. This is a cam which rocks back and forth, and which the spindle support arm passes through. The shock absorber cam activates the two smaller springs on the top front of the unit. Because the spindle support arm passes through the cam, tension on it means tension of the spindle support arm. This makes sliding the spindle shaft out easier. Removing the inner components will be required to align the bushings and get the spindle support arm back in, anyway.

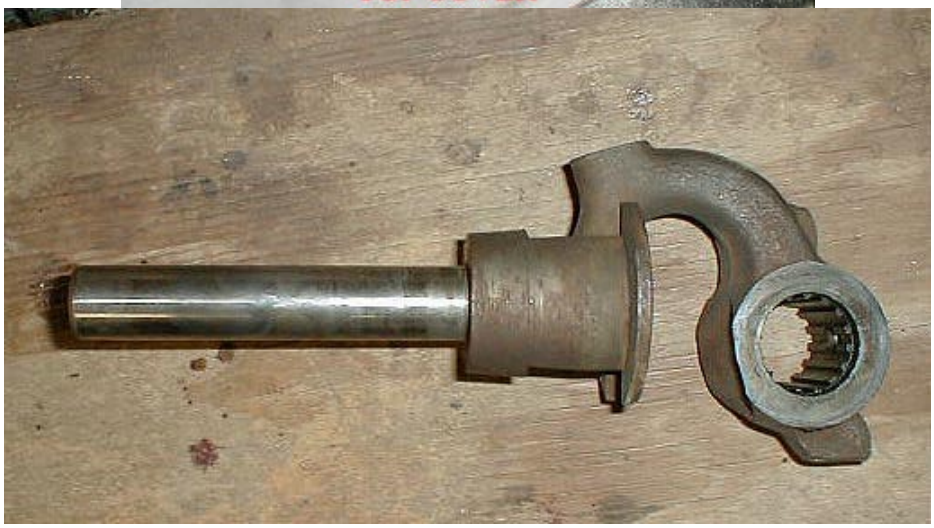

Inner shock absorber cam.

9. In the picture above you see the top cover and the adjusting plug, which screws up and down inside, putting more or less pressure on the inner main spring assembly. I made a little tool to turn the plug while clearing the cap edges. It is simply a bar with a notch in it to clear the ridge on the top cover. (As you can see, I also bent it!)

10. To lessen pressure on the inner spring, you turn the plug counter clockwise. It can **not pop** out on you as you unscrew it. The top cover holds the spring in. (For the spring to come out, you would also need to remove the top cover. The spring is wider than the plug. In fact, to remove the plug from the top cover, you have to remove the top cover and then turn the plug the other way (clockwise) until it drops out of the bottom of the cover.) I had to heat the cap to get the plug to start turning (and use a rust penetrant) then I proceeded to turn it counter clockwise as far as it would go. Later, after you have removed the top cap and plug, you will want to remove the plug and clean and lube the threads to facilitate final adjustment of the unit.

11. After the adjusting plug was screwed counter clockwise as far as it would go, I removed the outer top cap. This too required more heat. I used some over sized channel lock pliers, though a large pipe wrench would work too. This is why I prefer to leave the unit on the axle, as it makes a great "work stand" for disassembly of the unit. After unscrewing the outer cap, the spring flew out and chased me around the garage. Just kidding - there actually was barely any pressure left. I set the top and plug in kerosene to soak. In the top of the cap there is a large copper gasket ring which you should be careful not to loose. I would hate to try and find one of those!

12. Inside you will find a number of things - some good and some bad. You may find rust on the components. You may find a mass of nasty old gunk in the bottom. You should also find the upper spring seat assembly atop the main spring, then the main spring, which are pictured below. As you can see, part of the seat was rusty! Inside the main spring is a smaller spring which slips over a shaft which is part of the shock absorber cam arm. I know - sounds confusing - hopefully these pictures and diagrams will help. There may also be a main spring sleeve, though neither of my shock absorber units had one. These parts can be removed and cleaned.

13. Now it is time to remove the Bell Crank Support Shaft.

14. First you must remove the upper and lower shock absorbers. They are the sneaky ones. To remove them I suggest removing two of the bolts, and then finding a much longer bolt of similar thread size. Screw this in before removing the third bolt. This way the cover, which is pressing a strong little spring down against the double bell crank, will not propel the cover into your face when you remove the final bolt. Slowly remove the third bolt and let the cover "ride" up the longer bolt until the spring tension is released, then remove it. Set the cover, the spring and valve and bolts aside and remove the other cover the same way. Also soak these for cleaning. (When I removed the first shock absorber spring I found a needle bearing roller stuck in the hydraulic valve, folded in two. I knew I was in trouble then!)

15. Look down inside through the hole left by the top shock absorber spring cover. You should see a horizontal bar with a set screw in it. That bar part of the shock absorber cam assembly, and is what the spindle support shaft passes through. The spindle support shaft is splined on its outer surface, and the shock absorber cam is splined on its inner surface. The set screw holds them tightly together. You will need to unscrew the set screw. Mine were very tight fits, and I had to grind down an large screwdriver so it would be narrowenough to meet the screw, but be thick enough to fill the screw slot.

16. Once the set screw is removed I twisted off the cap that covers the end of the spindle support shaft on the car side. It is simply a cup like steel cap which seals the end of the shaft opposite of the spindle. Inside it is a paper gasket. To remove it I used a very large set of channel locks. I wrapped some thin leather around the cap before using the channel lock pliers to reduce teeth marks. You may have to heat it to get it loose, however it is not threaded, but simply pressed on, and mine came off without too much trouble.

17. With the steel cap removed, I next removed the spindle support arm. This is the part with the leaky seals. I removed the set screw, which holds the retainer on, and then unscrewed the retainer as far as I could, until it was up against the support shaft arm.

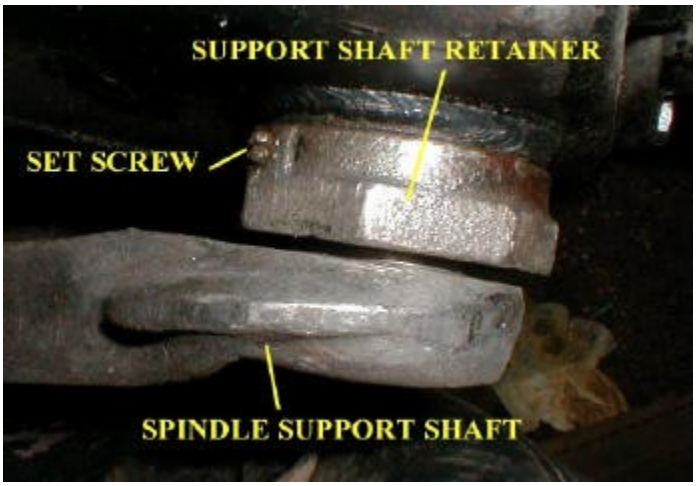

18. Next step was to push the spindle support shaft out. To do this I used a piece of one inch diameter oak stock to follow the shaft out, and hold the needle bearings in. (At that point I hoped the bearings were still useable) By applying firm but gentle taps against the stock with a shot filled rubber hammer, the shaft began to move out. Then I simply unscrewed the retainer and kept tapping until I could unthreaded the retainer. In case your needle bearings and shaft are still useable, remember to continue to follow through with the oak stock to hold them in place. After the shaft was about half way out I was able to remove it the rest of the way simply by using the wheel spindle as a handle and tugging on the shaft. And there they were, the worn out seals!

Picture #1 is the knee action unit on the car. The main shaft below is removed.

Above is a top view, with a piece of wood I used to "follow" the main shaft.

One end of the main shaft is worn by the needle bearings.

19. Now it was time to examine the situation. It was not pretty. Several of the "needles" were gone, one side of the shaft surface on each end was visibly worn down, and so was the surface of the housing that contained the bearings. It was that way on each end of the shafts. My immediate assumption was, "Better get this boxed up and ship them to be rebuilt." Over the course of the next few days I though more and more about alternatives, and decided to find out if I could have bushings installed

20. Locating a machine shop turned out not to be so easy. Due to the size of the Wheel Spindle Support Shaft, turning the ends for new bushings requires a large "throw", as the entire arm has to swing around on a lathe. After numerous lunch breaks spent canvassing machine shops, I finally found one which could do the job. Bruce the machinist was concerned that over time the lateral force applied to the bushings from turning the car might wear them out more quickly than needle bearings. On the other hand, there were no modifications being done to it that would preclude machining them for bearings at a later date. And it could be many miles before they might wear that badly. Finally he said he could do it, and I said please do!

21. By then I had thoroughly cleaned the housing and shock absorber cam assembly which the Wheel Spindle Support Arm sits in. It had been a lot work, for the inner top areas of the housing were rusty; not badly, but still rusty. The inside of the cover and top half of the main spring were rusty too. Rather than sandblast the inside of the housing, and risk getting silica powder all through it, I cleaned the goo and rust flakes out, then filled the housing with phosphoric acid purchased at a nearby home center. I have found phosporic to be very effective for steel, but never use it on cast iron.

REASSEMBLY

1. Reassembling the knee action units is essentially the reverse of disassembly. I will not go into the steps to replace the king pins; instead I have included a section from a Chevrolet service manual describing the removal and reassemble of the unit, along with the king pin bushings, and additional diagrams from Chevrolet manuals.

2. I replaced my kingpins and reattached the unit, still unassembled, back to the axle. That way it was lighter to lift and the car served as a work bench.

3. Next I inserted the shock absorber cam assembly back into the housing. I put the spindle support retainer back on the shaft (this is the cap that screws over the seals - that is one of those parts you do not want to see laying nearby after you think you are all done!) Then I applied some hydraulic fluid on the spindle support shaft, slid the new seals on and inserted the shaft through the housing. This took it through the new, outer bushing, through the shock absorber cam assembly, and on into the new inner bushing. Finally the spindle support shaft retainer was screwed on snug (for now).

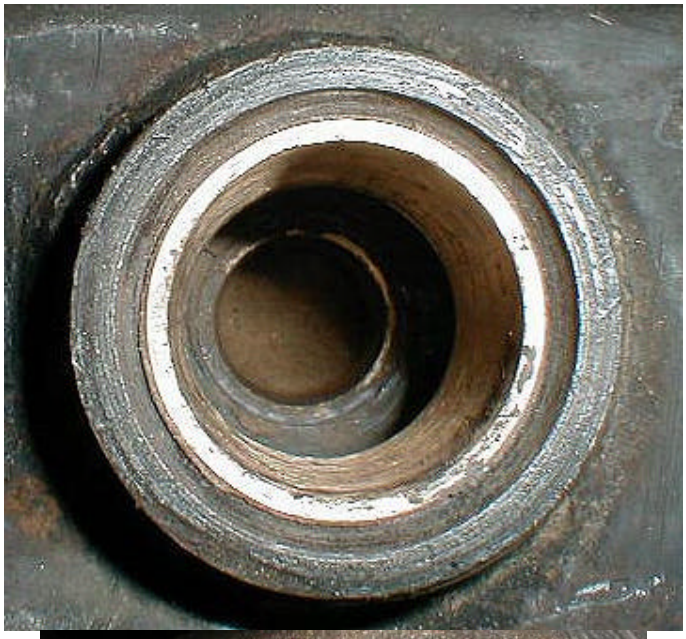

New bushings installed.

4. With that done you can then reinstall the internal springs, put the cap back on (you will have to adjust spring tension later) and reinstalled the spindle support shaft lock screw through the upper shock absorber hole, reinstalled the cleaned up shock absorber springs and parts (don't forget new gaskets, etc.) and tightened up the spindle support retainer. The shafts "cup" like cover was given a new ring gasket and some silicone sealer and knocked on with a soft mallet.

NOTE

This is my first attempt at a "how to" article. Hopefully I have shed some light on knee action units. I plan to add more info about this in the near future, including more pictures. If you have any suggestions, alternate approaches, whatever, please feel free to contact me at autoptic@spinn.net and I will, with great humility, add or correct my information.

KNEE ACTION SHOCK ABSORBERS

FRONT AXLE AND STEERING GEAR

How to Remove Knee Action Spring Unit

Note: There are two types of knee action spring units supplied for service. One type used in cars with spare wheels in the fenders has a longer main support spring than units used in other models. When exchanging units be sure to get a unit with the same length spring which can be identified by the length of the cap or dome at the top of the spring housing.

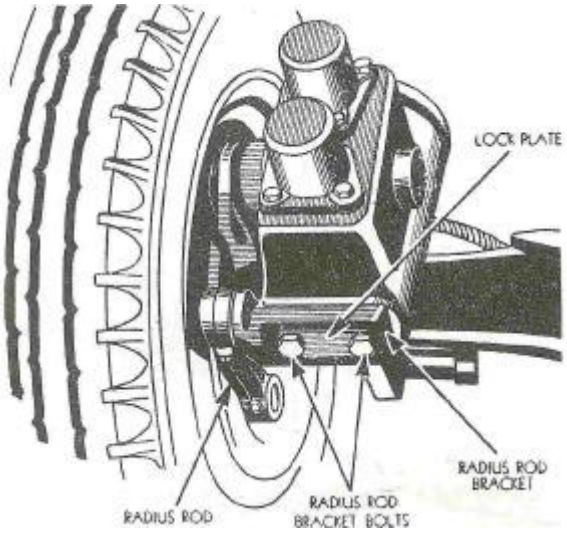

Fig. 68
View of under side of knee action unit.

To remove the knee action spring unit from the car proceed as follows:

1) Jack up the car and remove the front wheel and brake drum assembly.

2) Remove the two radius rod bracket bolts and lock plate, Fig. 68, grasp the radius rod and pull it and brake backing plate assembly off the spindle.

3) Remove the steering arm. (A special wrench may be obtained for removing the steering arm nut.)

4) Remove king pin retainer lock pin. Fig. 70, View B.

5) Remove the upper and lower king pin bearing plugs. In the 1934 models these plugs are held in by upsetting the king pin support boss while in the 1935-36 models (See View C) they are held in by lock rings. To remove the plugs in 1934 models first, remove the lower plug by driving down on the upper plug with a center punch; the upper plug can then be removed by driving the king pin up from the bottom.

The plugs in 1935 and 1936 models are removed in the same manner with the exception that it is first necessary to remove the dust cap and lock rings which hold the plugs in place,

6) Drive the king pin out through the top and pick out the remaining needle roller bearings in both the upper and lower king pin support bosses.

The knee action spring unit can now be lifted off the support bosses.

How to Reinstall Knee Action Spring Unit

To reinstall the knee action spring unit proceed as follows:

I) Place the knee action spring housing between the king pin support bosses.

2) Enter the king pin from the bottom until the top end of the pin is flush with the top of the king pin bore in the steering knuckle.

Note: The king pin should be entered with the longest end up and the slot in the side of the pin lined up with the retainer pin hole,

3) Slide the king pin thrust bearing (Fig. 70) into place between the upper side of the steering knuckle and the upper king pin support boss. The bearing should be installed with the dust shield up.

4) Measure clearance between top of king pin thrust bearing and under side of upper king pin support boss with feeler gauge. Tolerance at this point should not exceed limits of free fit to .006". If clearance exceeds .006" add a steel shim at this point.

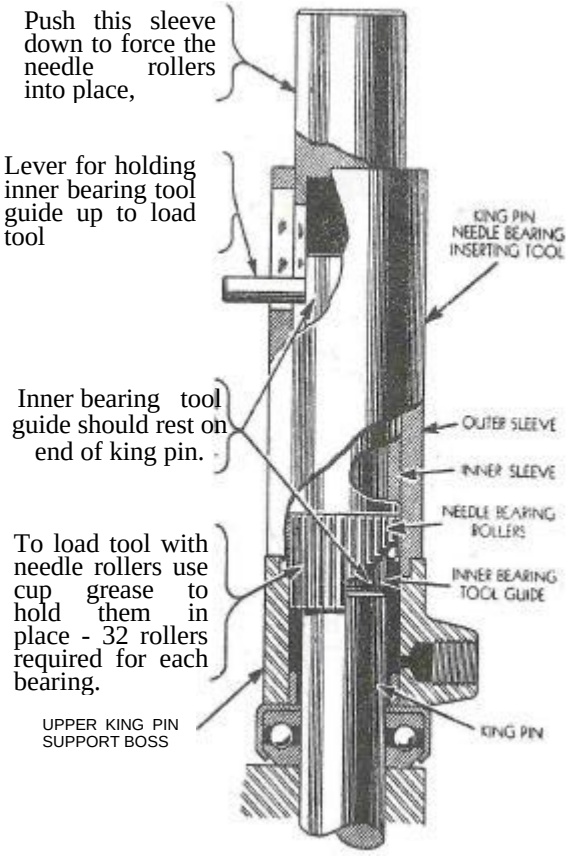

Fig.69
Sectional view of tool used for installing king pin needle bearings.

5) After operations 3 and 4 above have been completed, drive king pin up into place and insert king pin retainer lock pin.

6) Insert upper and lower king pin support needle bearings.

Note: thirty-two needle rollers are required for each of these bearings and should be installed by the aid of a special tool illustrated In Fig. 69.

7) After the king pin bearings have been installed replace the king pin bearing plugs. In models which do not have lock rings for holding these plugs in place, upset the edge of the king pin support boss with a center punch.

8) Assemble the brake backing plate and thrust washer on the wheel spindle and measure the distance from the shoulder of the spindle to the face of the thrust washer. This distance should not be less than .002" nor more than .004". It this measurement exceeds these limits, place a shim between the hub of the brake backing plate and the thrust washer.

9) After operation 8 above has been completed remove the brake backing plate and thrust washer and install the cork washer to the inside of the hub of the brake backing plate. The cork washer should first be coated with grease.

10) Assemble the brake backing plate, the bearing spacer and the inner bearing cone to the spindle. Be sure that the tang on the bearing spacer engages the slot in the spindle and that the bearing cone is centered in the thrust plate. The wheel should now be installed.

11) After the wheel has been installed, lift the radius rod straight up without moving it to either side and bolt the radius rod bracket to the spring housing. The radius rod bracket is threaded to the radius rod as described in View A, Fig. 70 and should be screwed all the way into the radius rod before bolting it to the spring housing. If the snug position of the bracket in the radius rod places the bracket at such an angle that it will not line up with the planed surface on the bottom of the spring housing, screw the bracket out until it does line up.

12) Fill the spring housing with shock absorber fluid and fill the reservoir in the back of the wheel spindle with a *good* grade of light grease. Drive the car over a rough road to work the shock absorber fluid into the shock absorbers and to check the action of the front wheels.

13) Finally, adjust front wheel setting as explained under "Front Wheel Adjustments" for knee action.

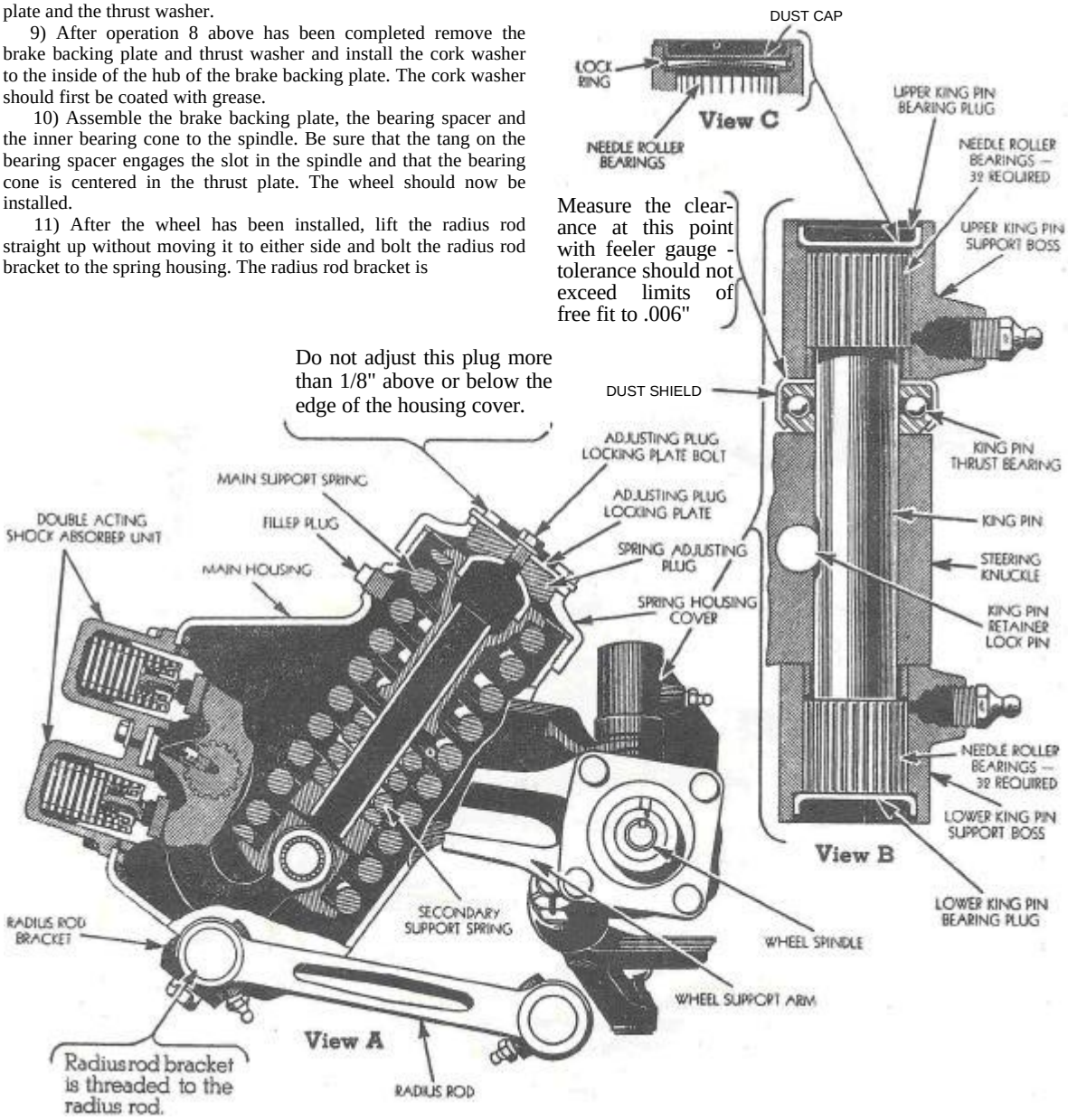

Fig.70

VIEW A: Cross section view of knee action unit showing main and secondary support springs.
VIEW B: Cross section view of king pin assembly showing needle bearings and position of king pin thrust ball bearing.
VIEW C: Cross section view of dust cap and bearing plug used in 1935 and 1936 cars.

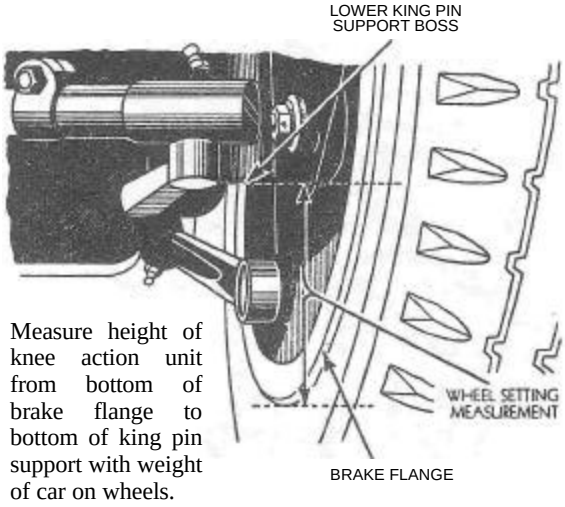

Measure height of knee action unit from bottom of brake flange to bottom of king pin support with weight of car on wheels.

Fig. 71
Front lower view of knee action front wheel showing where to take wheel setting measurement.

Front Wheel Adjustments

How to Adjust Wheel Setting (Knee Action): The wheel setting is the distance between the bottom of the lower king pin support boss and the bottom of the brake backing plate as shown in Fig. 71. This measurement should be 5 1/2" for 1934 models and 5 3/8" for 1935 and 1936 mode1s.

If the wheel setting is not correct, remove the adjusting plug locking plate, screw out the spring adjusting plug (See Fig. 70, View A) with a special wrench as shown in Fig. 72. Coat the threads of the plug with fresh gasket cement and replace it. Coating the threads of the adjusting plug with cement eliminates any possibility of a leak. Screw the adjusting plug in until the wheel setting is correct.

CAUTION: Check all measurements with the weight of the car on the wheels and do not attempt to adjust the wheel height where a deviation of more than 11/32" away from the correct setting is encountered. In cases where the variation is as great as this, the unit should be replaced. After the adjustment has been completed, the top of the spring adjusting plug should not be more than 1/8″ above or below the spring housing cover.

Wheel Setting Specifications

Knee Action

Caster Setting: 1934-35-36 Models--0 degrees; compensation for caster is obtained by trailing the center of the front wheels behind the center of the king pin.

Camber Setting: 1934 Models-1 degree; 1935-36 Models- 1/4 degree.

King Pin Inclination: 1934 Mode1s-7 degrees; 1935-36 Models-7 3/4 degrees.

Toe-In: 1934-35-36 Models--1/16" to 3/32".

Wheel Setting Specifications

Conventional Type Axle

Caster Setting: Passenger cars and 1/2 ton trucks from 1931 to 1934 inclusive-- 1 3/4 degrees; 1935 Standard passenger cars and 1/2 ton trucks--1 3/4 degrees; 1935-36 Master passenger cars-- 3 degrees; 1936 Standard passenger cars-- 2 3/4 degrees; 1936 1/2 ton truck-- l 3/4 degrees; all models of 1 1/2 ton trucks from 1931 to 1936 inclusive--2 3/4 degrees.

Camber Setting: All passenger car and truck models from 1931 to 1936 inclusive--l degree.

King Pin Inclination: All passenger car and truck models from 1931 to 1936 inclusive--7 degrees, 10 minutes.

Toe-In: All passenger car and truck models 5/64" to 1/8".

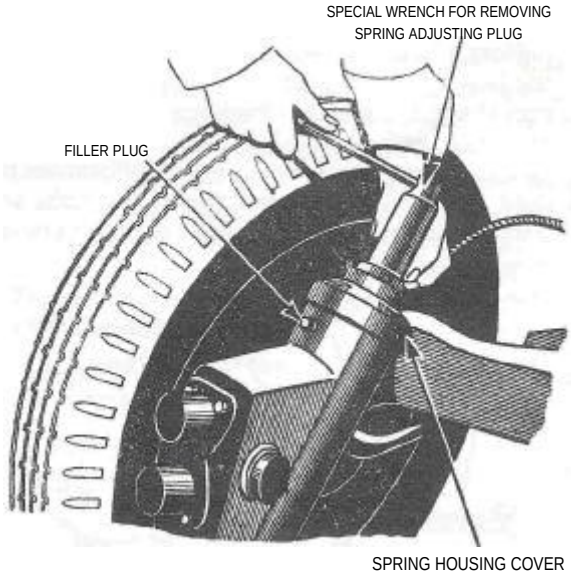

Fig.72
Top of knee action unit with special wrench in place ready to remove spring adjusting plug.

How to Remove Steering Gear

To remove the steering gear assembly proceed as follows:

1) Disconnect the pitman arm from the cross shaft.
2) Remove the floor boards.
3) Take the brake pedal off the pedal shaft.
4) Disconnect the horn wire.
5) Disconnect the steering gear from the frame and dash and remove the assembly out through the driving compartment of the car.

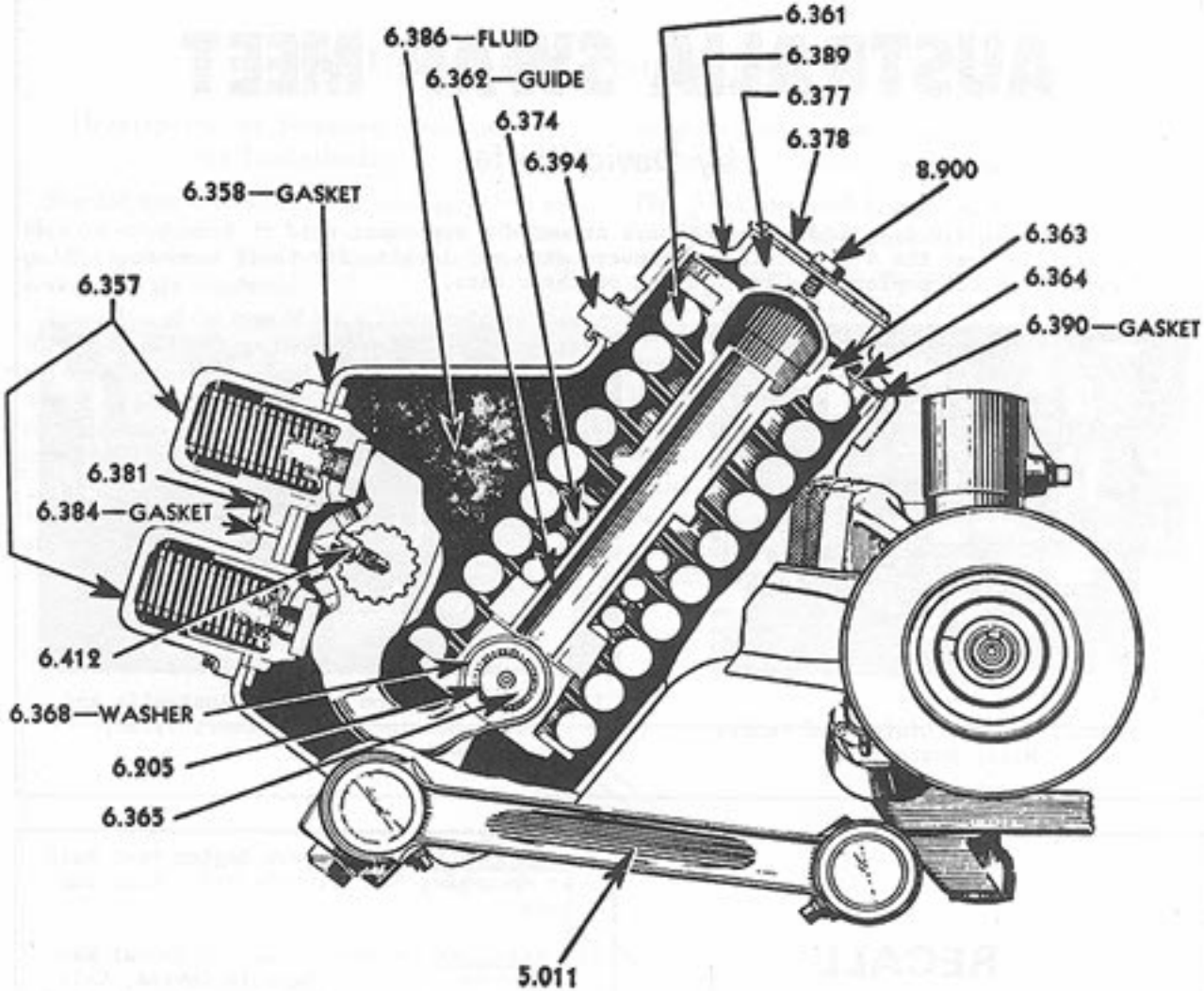

KNEE ACTION ASS'Y., ENCLOSED TYPE

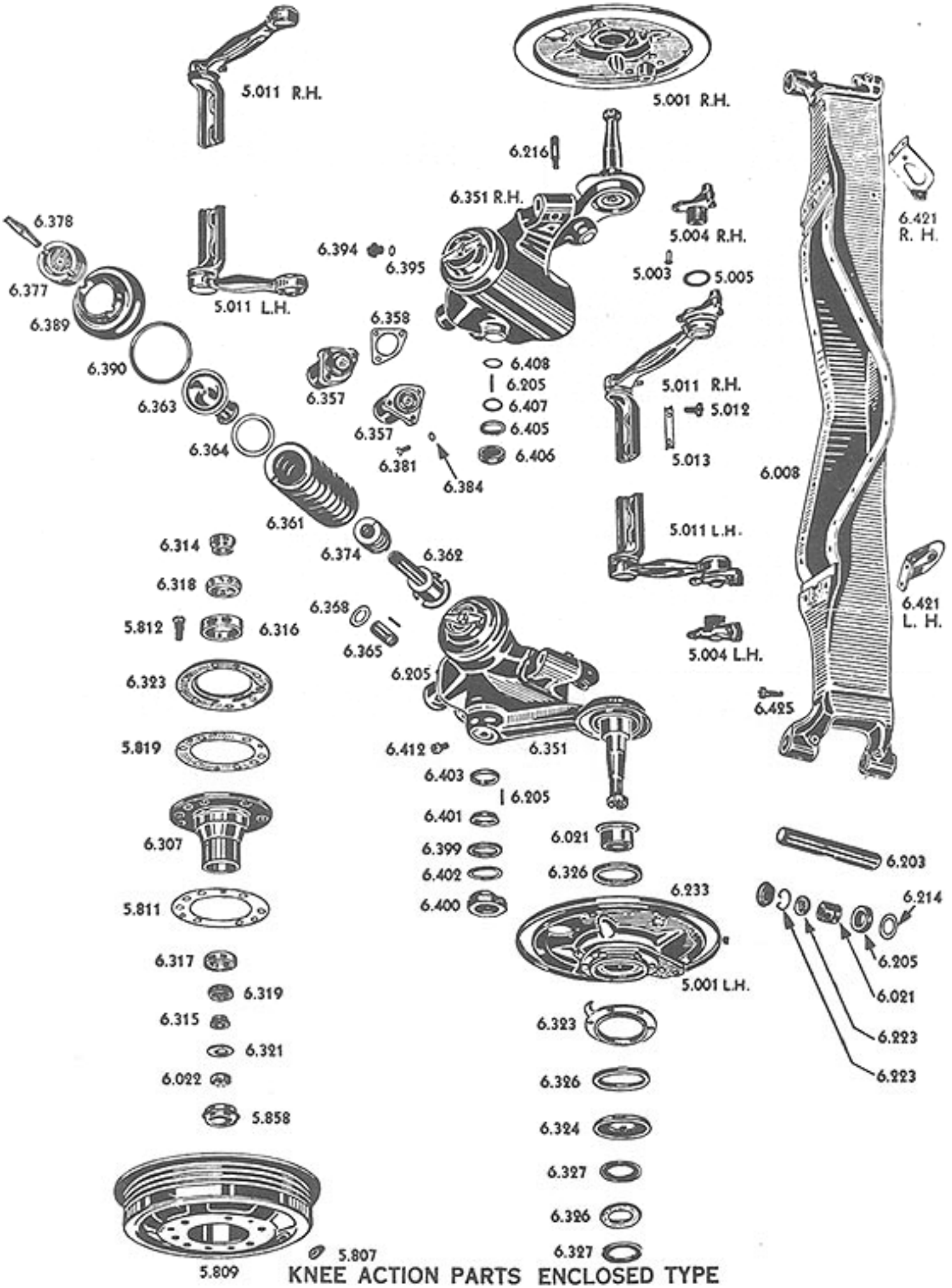

KNEE ACTION PARTS ENCLOSED TYPE

INDEPENDENT SPRINGING

Chevrolet 1934, '35, '36 Master Six
Pontiac 1934, '35, '36

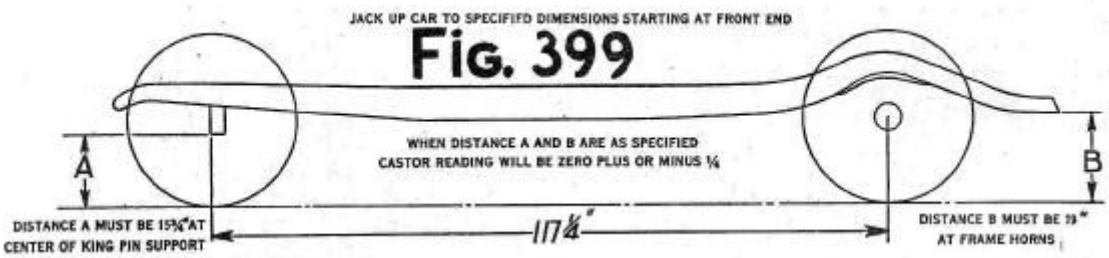

Fig. 399-Pontiac car leveling diagram, to be used when specialized front end equipment is not available.

CAMBER DEGREES

HOW MEASURED: Always measured with four tires resting on level floor or rack and front end of frame same distance from floor on both sides of car. Extra tires should be in place and car should be empty as regards passenger load.

	Chevrolet	Pontiac 1935	1936
LIMITS:	¼ to 1 ¾	1 to 2	0-¼
PREFERRED:	¾	1	.....
KING PIN INCLINATION DEGREES:		.....	
LIMITS:	7 to 8 ½	7	8 ¾
PREFERRED:	7 ¾	.....	

HOW ADJUSTED; Camber is not adjustable on Chevrolet. The 1934 Pontiac with similar construction is adjusted by bending the king pin support member, which roughly corresponds to the conventional front axle. Chevrolet factory does not recommend bending although camber correction by bending is approved by Pontiac. In any case padding should be used between king pin support member and bending tool to prevent crushing the member.

CASTER DEGREES

	Chevrolet	Pontiac
LIMITS:	1 ½ neg. to ½ pos.	.....
PREFERRED:	½ neg.	zero

HOW MEASURED: The caster angle is considered as the "angle between the king pin in the kin pin support member and the top of the chassis frame. Trailing action of the front wheels is attained by locating the center line of the road wheel approximately 3/16 in. back of the center line of the king pin. Since the recommended caster angle is zero the king pin should be exactly perpendicular, or at right angles, to the top of the chassis frame. When measuring, it is necessary that the top of chassis frame rails be exactly level or parallel with the floor or base upon which the car is standing. Measurements for leveling the Pontiac car are shown in Fig. 399. Distance "A" should be 15 ¾ in. measured from underside of king pin support directly in the center of member to the floor or rack. Distance. "B" should be 19 in. measured from underside of frame side rails at extreme rear to floor or rack. Jacks should be used to raise the car for attainment of level position, starting at the front end. Specifications for leveling the Chevrolet are not available, but both cars may be accurately checked with specialized front end equipment.

HOW ADJUSTED: Caster Is not adjustable except by bending the king pin support member which is not recommended by Chevrolet factory. Pontiac employing similar construction approves bending as a method of adjusting caster. In any case padding should be used between support member and bending tool to prevent crushing the member.

TOE-IN

RECOMMENDED TOE-IN: 5/64 to in. Chevrolet, 1/32 to in. Pontiac, both at hub height. 1935, '36 Pontiac 0-1/16 in.

HOW MEASURED: In conventional manner, or from center of tire tread to center of tire tread as shown at A-B in Fig. 113. Mark center of tread of both tires at rear at hub height, measure across from mark to mark, roll car forward half a revolution and measure across same marks when they are at front.

HOW ADJUSTED: In ordinary manner by shortening or lengthening the single tie-rod.

TIRES: Tires on 1934 Pontiac carry balance marks. Square balance mark indicates tire is for installation on front wheels. Tires with round balance marks are for rear wheels.

SUSPENSION UNITS

REMOVAL OF UNIT FROM CAR: Suspension units are now serviced in same manner as any other part of the car. Removal of a unit is accomplished as follows:

1-Jack up front end of car and remove wheel and hub separately. Then remove inner wheel bearing cone,

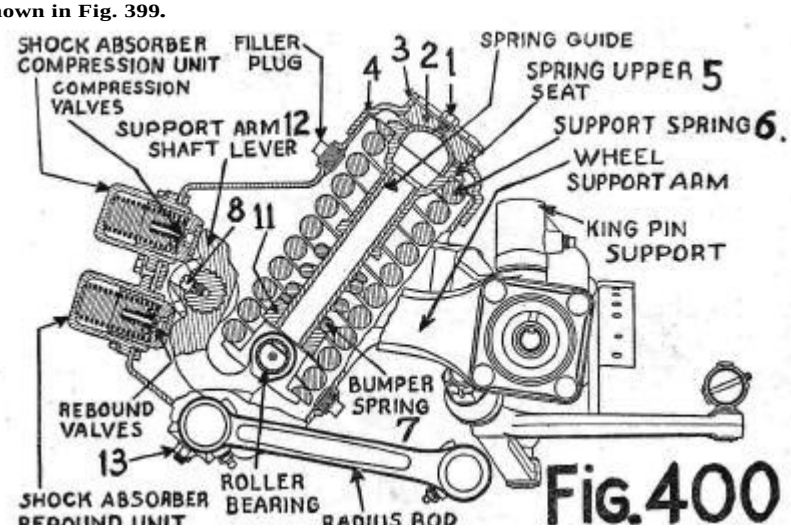

Fig. 400-Side view Dubonnet type independent suspension unit used on 1934 Chevrolet Master 6 and all 1934 Pontiac cars. Part designations shown are official Chevrolet factory parts nomenclature.

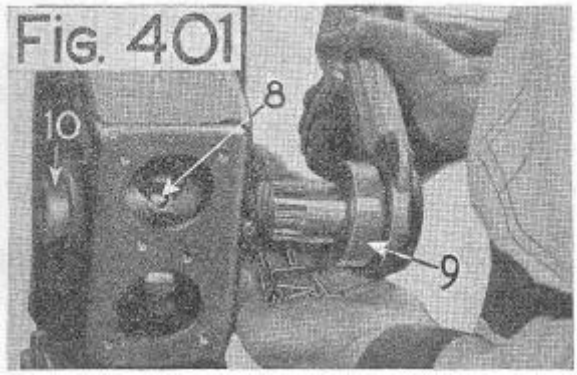

Fig. 401-Removing the support arm shaft. Note needle rollers are released.

hub inner packing retainer, thrust washer and shims back of thrust washer.

2-Remove the two bolts and lock plate "13" in Fig. 400 at bottom of the spring housing. Turn the unit outward and then lift off the brake backing plate assembly holding the radius rod to prevent it from striking the floor.

3-Remove the steering arm nut (special Kent-Moore wrench No. KMO-53) and drive out the steering arm with a soft drift. Next remove the king pin lock pin. Now drive down on king pin upper Welch plug until the king pin forces out the lower Welch plug. Then using a soft drift, drive the king pin and upper plug up through top of king pin yoke. The 64 needle rollers, and two bearing spacers will be released when king pin is withdrawn. Make sure that none are lost.

DISASSEMBLY OF UNIT: Wash outside of unit thoroughly. Clamp unit securely in a vise with soft jaws gripping unit at lower boss for radius rod bracket.

Fig. 402-Component parts of the support arm assembly.

4-Remove the 5/16 in. cap screw "1" from adjusting plug "2" and lift out the lock plate "3," Remove adjusting plug "2" by unscrewing (special Kent-Moore wrench No. K-477) with a wrench that will fit the slot.

5-Remove housing cover "4" by unscrewing (special Kent-Moore wrench No. K-450) with a wrench that will fit the slot.

6-Lift spring upper seat assembly "5," out of housing and then the large outer spring "6" as In Fig. 400. If a spacer is found under this spring it must be reinstalled, but if a new spring is installed the spacer should be discarded.

7-Remove unit from vise, strain the shock absorber fluid into a clean container, then replace unit In vise.

8-Back off the cap screws holding the shock absorber units one turn at a time to prevent pressure being concentrated on one corner of the housing. Remove the shock absorber units.

9-Remove lock screw "8," Figs. 400 and 401, through upper shock absorber opening. Now unscrew the support shaft outer cover "9" (Kent-Moore supply a chain grip wrench No. K-453) from housing.

NOTE: On later jobs it is necessary to remove the cover lock screw.

Pull the support arm shaft out of the housing, holding one hand as shown in Fig. 401 to catch the 49 needle rollers as they fallout. Now lift out the lower spring seat "11" and shaft lever "12" as an assembly and then remove the spring seat from the shaft lever. Do not lose the 32 needle rollers and the two spacers.

10-Insert a soft drift through housing and drive off the support shaft inner packing cover from housing boss "10." Do not lose the 37 needle rollers.

11-Clean all parts thoroughly and inspect for wear.

REASSEMBLY: Reassemble in reverse order, observing the following precautions:

12-When assembling the roller bearing spacer to the support arm shaft make sure that the bevel side of spacer faces as shown in Fig. 402.

13-To facilitate reassembly of support arm shaft needle rollers apply a light coating of grease to shaft, then use a rubber band to hold them in place while inserting assembly into housing. See Fig. 403.

14-After inserting and tightening the lock screw "8," Fig. 400, peen edge of hole to lock screw in position.

15-Before installing support shaft inner bearing cover on boss "10" in Fig. 401, use a new cork packing. Spread a light coat of gasket cement (not shellac) in the inner cover, place cover over boss "10" and drive into place with a hammer.

16-For identification purposes the valve in the upper shock absorber unit is marked "G-O" and the valve in lower unit is marked "3-C." Shock absorber component parts should be assembled in the order shown in Fig. 404. To facilitate assembly, align the hole in the piston with

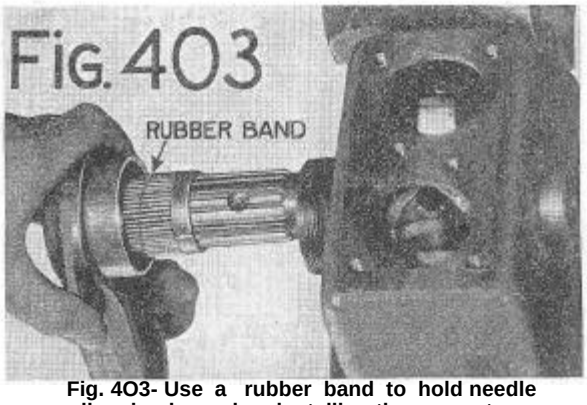

Fig. 4O3- Use a rubber band to hold needle rollers in place when installing the support arm.

hole in cylinder. Compress spring until both holes register, then insert a small nail or cotter pin into aligned holes to lock in compressed position. Always use new lead washers under the cap screws which hold the shock absorber assemblies to unit housing. Raising or lowering the wheel support arm while evenly tightening the cap screws will relieve spring tension. When all screws are tightened, remove cotter pin or nail.

17-Before installing the upper spring seat "5," Fig. 400, fill the housing with G-M Shock Absorber Fluid to the filler pipe plug lever. Use a new housing cover gasket coating both sides with gasket cement before inserting into cover. Threads at top of housing should be coated with white lead. Screw the cover down- tight enough to compress the copper gasket.

18-Coat the threads of the adjusting plug "2," Fig. 400, with gasket cement and the bottom lightly with grease before screwing it down flush with housing cover.

RE-INSTALLING ON CAR: Smooth the Welch plug seats in bottom and top of king pin support member, then assemble the suspension unit to king pin support inserting thrust bearing assembly at "20," Fig. 405. with the dust shield toward top.

19-Insert king pin and check clearance between king

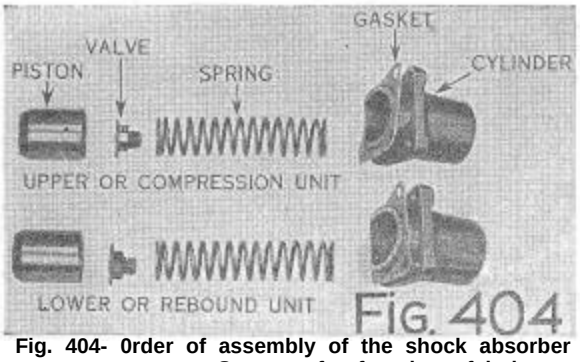

Fig. 404- 0rder of assembly of the shock absorber component parts. See text for function of hole in each piston.

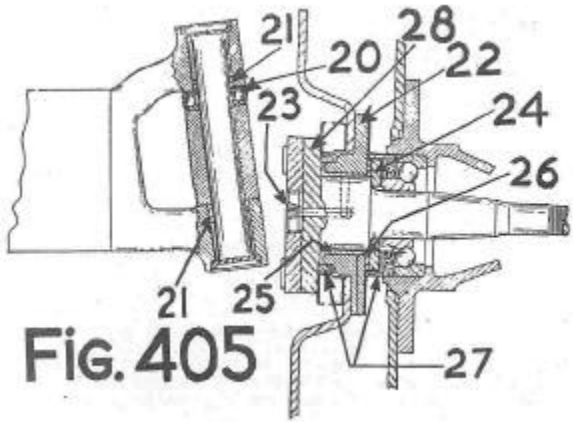

Fig 405 -King pin and spindle and hub assembly. Note screw plug at "23" for lubricating bushing "25".

pin thrust bearing and upper yoke. Use a feeler and if clearance is greater than .006 in. install a steel spacer.

20-Insert bearing spacers "21," Fig. 405, top and bottom, then insert 32 rollers in top king pin boss, holding them in place with No. 21/2 cup grease. Do the same with 32 needle rollers at lower boss, then install new Welch plugs locking them with blunt punch. Unit must swing freely without end play or shake.

21-Assemble the brake backing plate hub "22" to the spindle with both cork gaskets "27" removed. Assemble the thrust washer "24" to the dowel and check the clearance from edge of shoulder on spindle to the face of thrust washer. This clearance should be from .001 to .005 in. when the flange plate bushing "25" is pressed firmly against the spindle flange "28." This clearance can be very accurately gaged by adding one shim "26" Chevrolet part No. 374033 at a time BEHIND the bronze thrust wash er, until the backing plate just *binds* when the spindle nut is tightened-then remove one shim. After proper clearance has been obtained *remove* the backing plate and the thrust washer.

22-Now assemble the cork washer "27" to the inside of the brake backing plate after coating the washer with heavy oil or grease. Then mount the assembly to the spindle followed by the bronze thrust washer "24," which must fit Its locating dowel. Coat the outer cork washer "27" with heavy oil or grease and assemble it to the bearing spacer. Now install the bearing spacer making sure that its locating tang engages the slot in spindle, then install the inner bearing cone followed by the wheel hub. Lubricate the backing plate bushing sparingly with Petrolatum (Vaseline) through the plug "23" on inner end of wheel spindle.

23-With the car resting on stands under front wheel hubs bounce the front end up and down, then check for proper car height by measuring from the bottom of king pin boss to the bottom of brake backing plate at each wheel, as shown in Fig. 406. The distance should be within the limits 51/4 to 53/4 inches with 51/2 inches the desired dimension. If not within these limits adjust the inner plug "2" Fig. 400, at top of unit until distance is same on both sides within 1/8 in. This plug must not be turned more than two turns in or out from the flush position. Remove and examine interior parts of unit if more than two turns from flush position are required to get the recommended height dimension.

24-With the weight of the car on wheels connect the radius rod to the unit housing. The radius rod bracket should be at least 1/8, but not more than 11/8 turns, loose from the full tight position. Bracket must not be forced to enter screws-holes in bracket should be filed for clearance if necessary. Assemble the lock plate and tighten the two bolts securely.

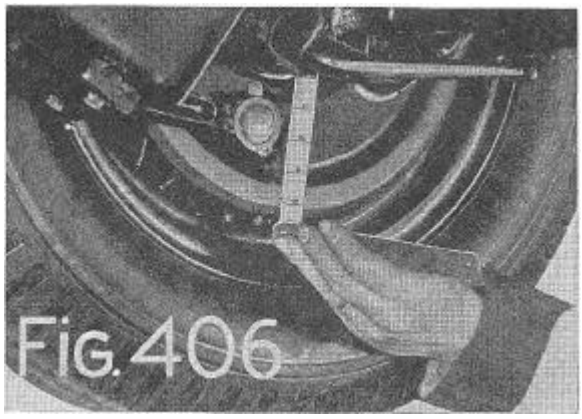

Fig. 4O6-Distance from bottom of king pin boss to bottom of brake backing plate must be within the limits of 5 ¼ to 5 ¾ inches.

1934, 35, 36 Chrysler, 1934 Dodge, Plymouth

Chrysler CA, CB, C6, C7, CS, CZ, Dodge DR, DS, Plymouth PE, PF

CAMBER DEGREES

1/4 neg. to 1/2 pos., 1/4 'pos. preferred.

On crowned roads Plymouth recommend 0 camber on Right wheel.

KING PIN INCLINATION DEGREES: 8 3/4 to 10 1/4. (Depends on camber angle.)

HOW MEASURED: With conventional equipment. Always measure with four wheels resting on level floor, extra tires in place, but no passenger load. Note and record the reading on each side on a piece of paper, because adjustment will be made with the wheels jacked up,

HOW ADJUSTED: Before correcting camber, measure king pin pivot angle plus the camber angle, or the king pin angle alone. If king pin pivot angle is incorrect, it indicates a bent steering knuckle support which should be replaced. If king pin angle is correct, jack up car by jack pad so that weight is off the front wheel to be adjusted. Remove front wheel and disconnect tie-rod at the wheel end. Remove upper control arm yoke nut, using special wrench and pull the yoke out of the shock absorber arm. Remove washers between yoke and shock absorber arm to decrease camber and install additional washers to increase camber. A 1/16 in. thick washer is equivalent to 1/3 deg. camber. Install upper control arm yoke in shock absorber arm and tighten nut securely. Reconnect tie-rod, make sure that the length of the tie-rod is the same as the tip-rod on the opposite side.

CASTER

ANGLE DEGREES: 1/2 to 21/2.1 deg. preferred.

HOW MEASURED: A machinist protractor may be placed on the machined bosses on the knuckle support or conventional equipment may be used, Always measure with the four wheels resting on level floor or rack and with extra tires In place but no passenger load, Note and record reading on piece of paper as adjustments will be made with the wheels jacked up.

HOW ADJUSTED: Jack UP front end of car, placing jack under control anchor plate or under spring pads. Loosen upper and lower control arm yoke nuts. Tap bolts with soft hammer to loosen them. Loosen clamp bolts on upper end of the knuckle support and on the arm of the upper yoke. Remove lubrication nipple in end of upper yoke center bolt and insert special plug type hexagon wrench. Turn yoke center clockwise to increase caster. One complete turn of the wrench will change the caster 1¾ deg. One-quarter turn changes caster about 1/2 deg. Tighten clamp screws and both yoke nuts. Remove jack from car and check caster angle. Whenever caster angle is changed, camber angle is also