CARBURETER

WCFB Four Barrel Carberetor

SERVICE MANUAL

SINGLE and DUAL INSTALLATIONS

CARTER CARBURETOR CORPORATION
SAINT • LOUIS • MISSIONARIES

www.carburetor-manual.com

CARTER WCFB CARBURETOR
FOUR BARREL CARBURETOR

GENERAL DESCRIPTION AND OPERATION

A Carter WCFB Climatic Control carburetor (Fig. 1-C) is available as optional equipment on 8-cylinder engines. This carburetor is used in conjunction with a dual exhaust system and higher compression heads when higher engine performance is desired.

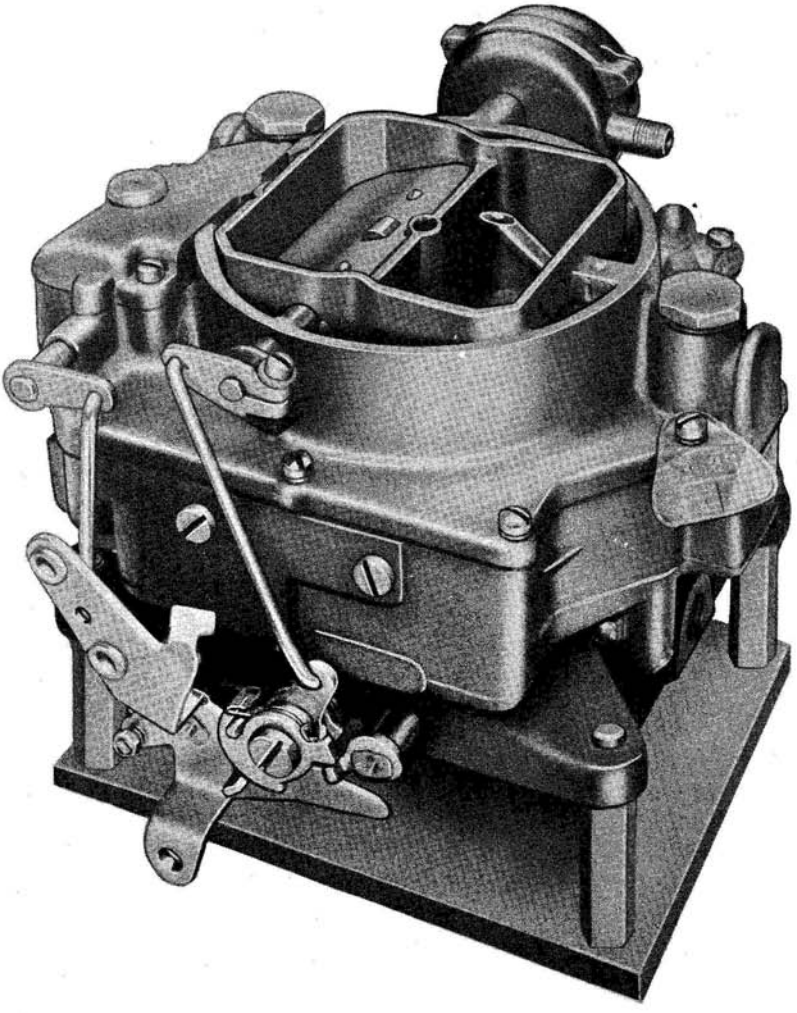

Fig. 1-C Carter WCFB Carburetor

www.carburetor-manual.com

Functionally, the Carter Model WCFB carburetor is two dual carburetors contained in one assembly and consists of four basic castings: choke housing, bowl cover, carburetor body, and throttle flange. The section containing the metering rods, accelerating pump and choke is termed the primary side of the carburetor, and the other section is termed the secondary side. It has five conventional systems as have been used in previous carburetors: float systems, low speed system, high speed system, pump system, and Climatic Control System (choke).

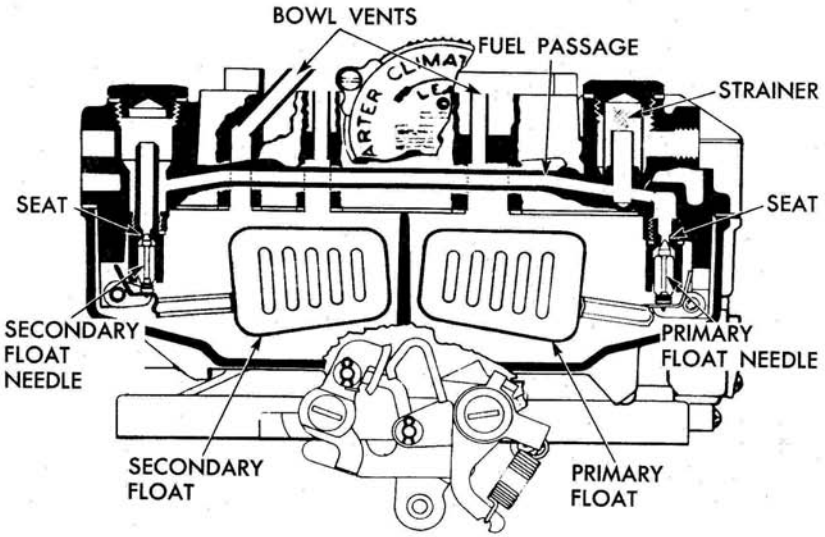

Fig. 2-C Float System

Float Systems

The float systems (Fig. 2-C) maintain adequate supply of fuel at the proper level in the fuel bowls for the low speed, high speed, pump, and choke systems. Primary and secondary bowls are separated by a partition. The fuel line connection is on the primary side. Fuel is supplied to the primary and secondary intake needles and seats through a passage in the bowl cover. A strainer located at the fuel inlet in the bowl cover prevents the entry of dirt and oxides.

Fuel level in the carburetor is maintained by needle valves and floats. As fuel is consumed, the floats descend with the fuel level allowing the float needles to unseat. The resulting opening allows fuel to flow into the bowls until the floats are lifted by the increased level and again seat the needles. Because of this critical function,

www.carburetor-manual.com

the floats must be carefully adjusted both vertically and laterally. These adjustments are fully covered under "MAJOR SERVICE OPERATIONS".

Intake needles and seats are carefully matched during manufacture. Do not use the primary needle in the secondary seat or vice-versa. To avoid unnecessary bending, floats should be reinstalled in their original positions and then adjusted.

The bowls are vented to the inside of the bowl cover. Bowl vents are calibrated to provide proper air pressure above the fuel at all times. To assure a positive seal, always use a new bowl cover gasket and a new dust cover gasket when reassembling as an air leak at either place can result in a performance or economy complaint.

A connecting passage along the outside of the body effects a balance of the fuel levels and air pressures between the two bowls.

Low Speed System

Fuel for idle and early part throttle operation is metered through the low speed system (Fig. 3-C).

Fuel enters the idle wells through the metering rod jets on the primary side of the carburetor. No idle system is used in the secondary side of the carburetor.

The low speed jets measure the amount of fuel for idle and early part throttle operation. The air by-pass and idle air bleeds are carefully calibrated and serve to break up the liquid fuel and mix it with air as it moves through the passages to the idle ports and idle adjustment screw ports. Turning the idle adjusting screws toward their seats reduces the quantity of fuel mixture supplied by the idle system.

The idle ports are slot shaped. As the throttle valves are opened, more area of the idle ports is uncovered allowing a greater quantity of the fuel-air mixture to enter the carburetor bores. The secondary throttle valves remain seated at idle.

The vapor vent, operated by the vapor vent arm on the countershaft, provides a vent for fuel vapors to escape from the carburetor bowls to the outside at idle and when the engine is not in operation.

All by-passes, idle ports, idle adjustment screw ports, as well as the bores of the throttle body must be clean and free of carbon. Obstructions will cause poor low speed engine operation.

www.carburetor-manual.com

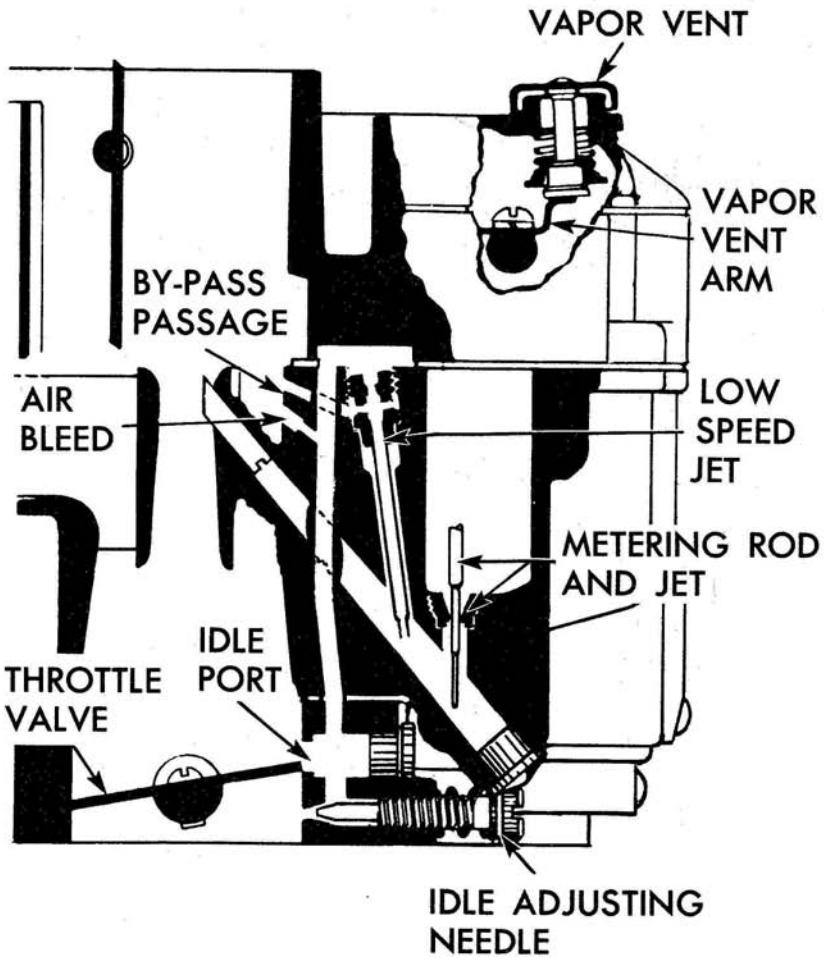

Fig. 3-C Low Speed System

Vapor Vent Passages

Under certain conditions of high, under-hood temperature, fuel vapor forms in the throttle bores when the engine is not operating. This vapor accumulation may retard hot engine starting until sufficient air is drawn into the carburetor to mix with the vapor to form a combustible mixture.

The throttle bore vapor vent passages vent the bores above the throttle valves to cavities in the underside of the carburetor flange. Air is admitted to these cavities through openings in the flange gasket. The air supplied by these vent passages, when mixed with the accumulated vapor, forms a more combustible mixture. This improves hot engine starting.

www.carburetor-manual.com

High Speed System

Fuel for part and full throttle operation is supplied through the high speed system (Fig. 4-C).

PRIMARY SIDE

The position of the metering rods (Fig. 4-C) in the metering rod jets controls the amount of fuel flowing into the high peed system on the primary side of the carburetor. The position of the metering rods is dually controlled; mechanically by the movement of the throttle and by manifold vacuum applied to the vacumeter piston which is suspended on the vacumeter link (Fig. 5-C).

Mechanical Operation of Metering Rods

During part throttle (high vacuum) operation, the position of the metering rods is controlled by the metering rod arm attached to the pump countershaft (Fig. 5-C). Mechanical positioning of the rods is required to prevent fuel starvation as under high vacuum conditions the vacuum pull completely overcomes the vacumeter piston spring tension and the metering rods would fully close the metering rod jets.

Vacuum Operation of Metering Rods

When vacuum pull is less than the tension of the vacumeter piston spring, the metering rods (Fig. 5-C) are moved toward their "wide-open" position. Low vacuum occurs during acceleration, hill climbing, and other engine load conditions. As the engine load decreases, manifold vacuum increases until once again mechanical metering rod action takes place.

SECONDARY SIDE

Fuel for the high speed system of the secondary side is metered by the secondary jets (Fig. 4-C); no metering rods are used.

Throttle valves in the secondary side remain closed until the primary throttle valves have been opened a predetermined amount. This is accomplished by linkage between the throttle levers. Although the secondary throttle valve opening is delayed, both the primary and secondary throttle valves reach the "wide-open" position simultaneously. During choke operation, the secondary throttle valves are locked closed to insure faster cold engine starting and warm-up.

www.carburetor-manual.com

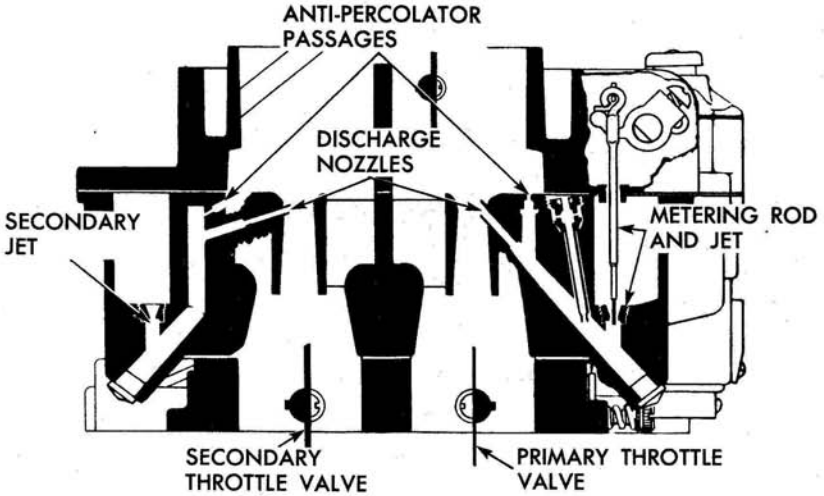

Fig. 4-C High Speed System

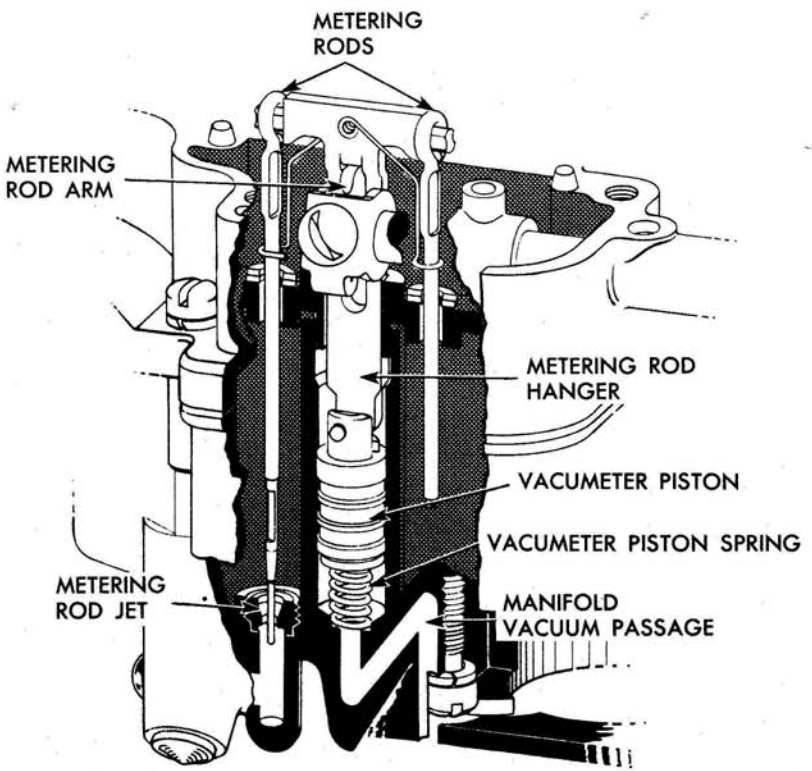

Fig. 5-C Vacumeter Piston and Metering Rod

www.carburetor-manual.com

ANTI-PERCOLATOR

To prevent vapor bubbles in the nozzle passages and low speed wells from forcing fuel out of the nozzles, anti-percolator passages (Fig. 3-C) and calibrated plugs and bushings are used. Their purpose is to vent the vapors and relieve the pressure before it is

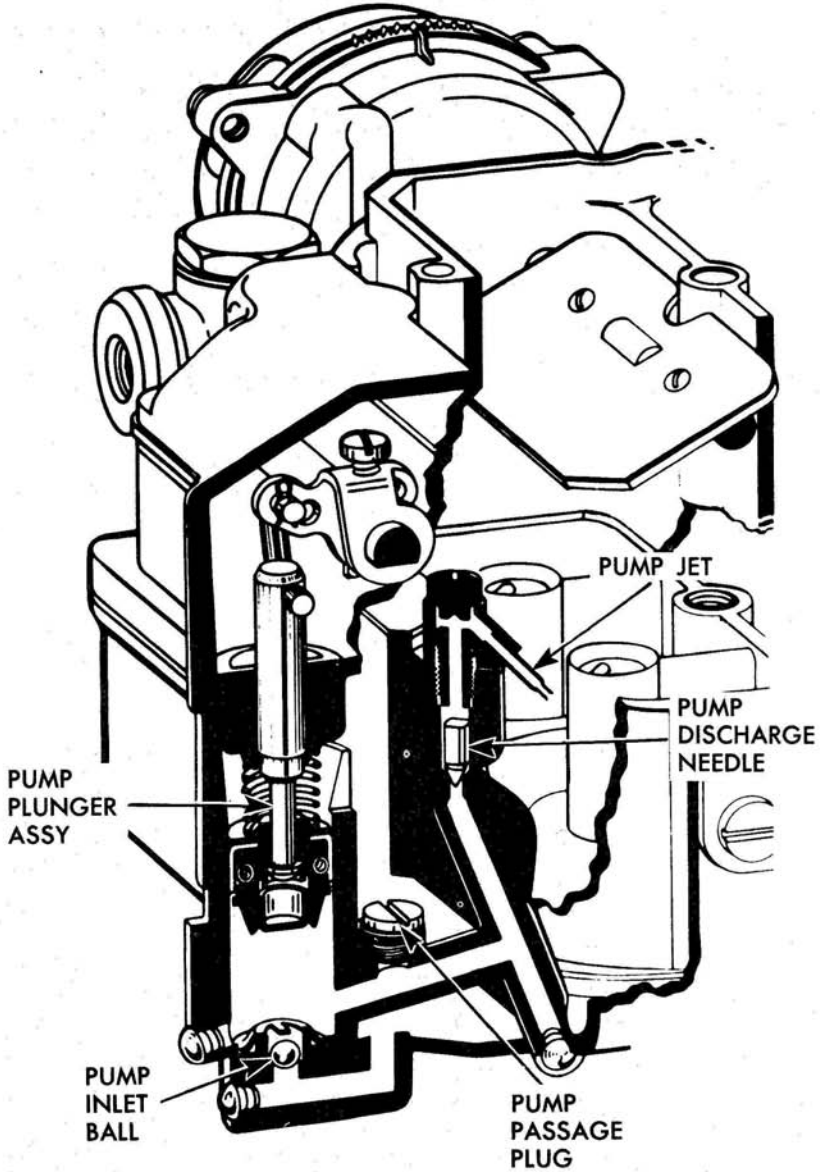

Fig. 6-C Pump System

www.carburetor-manual.com

sufficient to push the fuel out of the nozzles and into the intake manifold. Anti-percolator plugs and bushings are permanently installed and must not be removed in service.

Pump System

The pump system (Fig. 6-C) is located only in the primary side of the carburetor.

The accelerating pump circuit provides the measured amount of fuel necessary to insure smooth engine operation during acceleration at speeds below approximately 30 MPH.

When the throttle is closed, the pump plunger moves upward in its cylinder and fuel is drawn up into the pump cylinder inlet passage. The pump discharge needle is seated at this time to prevent air from being drawn into the cylinder. When the throttle is opened, the pump plunger moves downward forcing fuel out through the discharge passage, past the discharge needle, and out of the pump jets. When the plunger moves downward, the inlet ball is seated preventing fuel from being forced back into the bowl.

If the throttle is opened suddenly, the pump spring will be compressed by the plunger shaft telescoping, resulting in a steady pump discharge of longer duration.

At speeds above approximately 30 MPH, pump discharge is no longer necessary to insure smooth acceleration. When the throttle valves are opened a predetermined amount, the pump plunger bottoms in the pump cylinder, eliminating pump discharge.

Choke System

The Climatic choke control system (Fig. 7-C) provides the correct fuel-air mixture necessary for quick cold engine starting and warm-up.

When the engine is cold, tension of the thermostatic coil (Fig. 8-C) holds the choke valve closed. When the engine is started, air velocity against the choke valve (not shown) causes the valve to open slightly against the thermostatic coil tension. Intake manifold vacuum applied to the choke piston pulls the choke piston downward, opening the choke valve. The choke valve assumes a position where tension of the thermostatic coil is balanced by the pull of vacuum on the piston and air velocity on the offset choke valve.

www.carburetor-manual.com

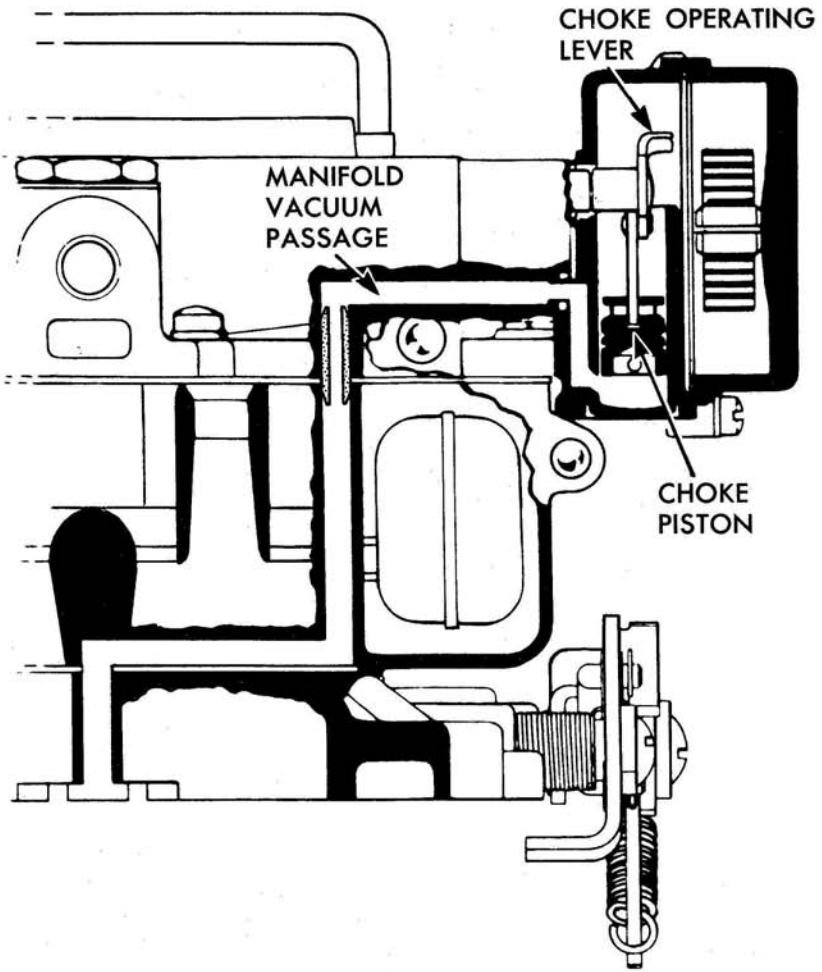

Fig. 7-C Choke System

When the engine starts, slots located in the sides of the choke piston cylinder are uncovered allowing intake manifold vacuum to draw warm air from the hot air tube located in the exhaust manifold through the Climatic control housing. The flow of warm air in turn heats and expands the thermostatic coil causing it to lose some of its tension. The tension loss is gradual until finally the choke valve reaches wide open position.

When the engine is accelerated during the warm-up period, the corresponding drop in manifold vacuum allows the thermostatic coil to momentarily close the choke valve providing a richer mixture.

www.carburetor-manual.com

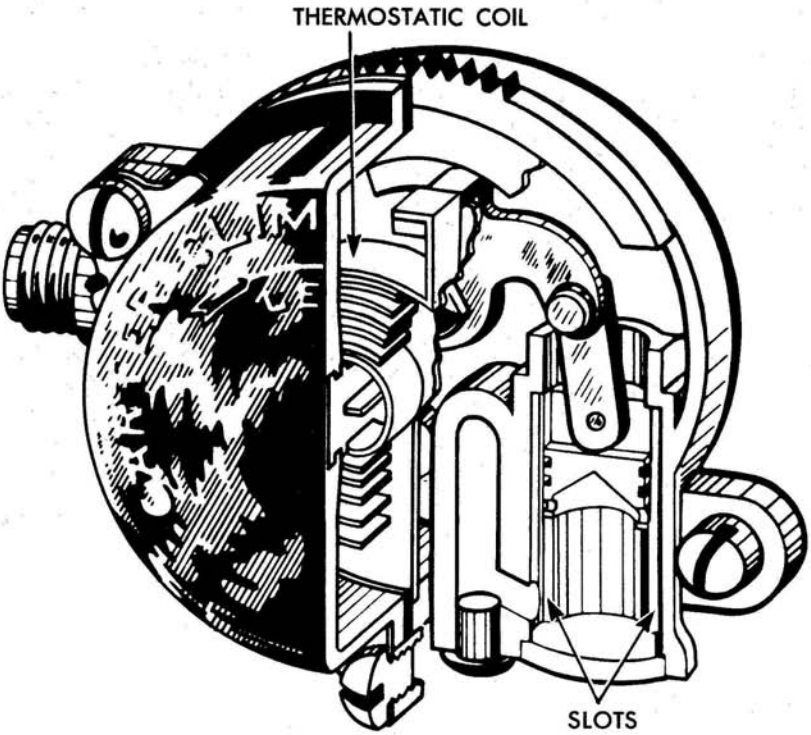

Fig. 8-C Choke Housing and Piston

During the warm-up period, it is necessary to provide a fast idle speed to prevent engine stalling. This is accomplished by a fast idle cam (Fig. 9-C) which is rotated by a connector rod attached to the choke shaft lever. The fast idle cam prevents the primary throttle valves from returning to a normal warm engine idle position while the Climatic choke control is in operation.

If the engine becomes flooded during the starting period, the choke valve can be partially opened manually by depressing the accelerator pedal to the floor. The unloader projection on the throttle lever unloader will rotate the fast idle cam and, in turn, partially open the choke valve.

CARE, MAINTENANCE AND ADJUSTMENTS

Adjustments on the Car

All adjustments listed below can be done without removal of the carburetor from the engine. The adjustments described on the following page should be made in the following sequence:

www.carburetor-manual.com

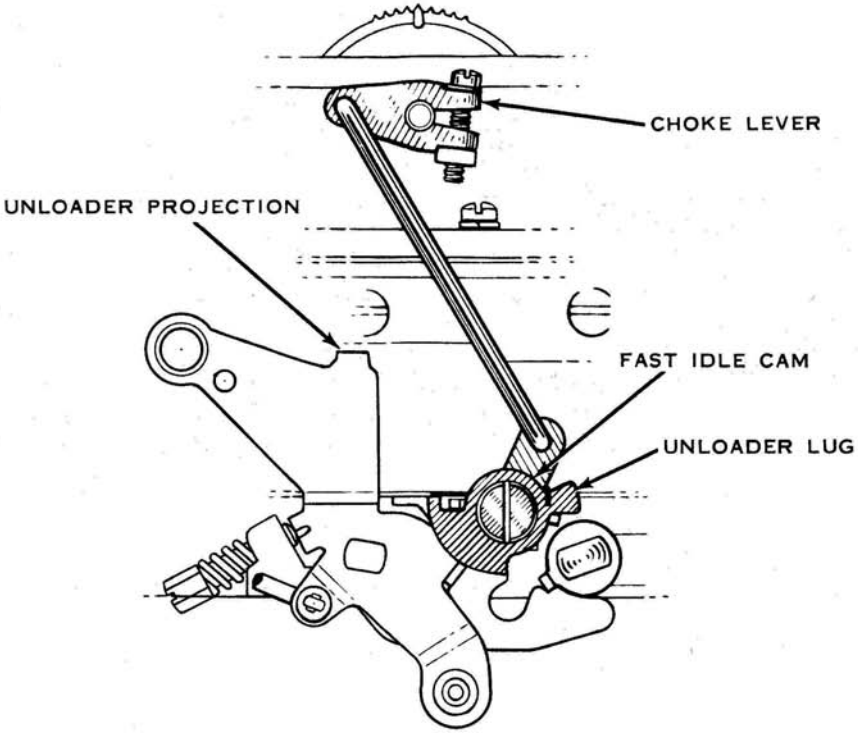

Fig. 9-C Choke Linkage

1. Accelerator Linkage Adjustment
2. Idle Speed and Mixture Adjustment
3. Fast Idle
4. Automatic Choke Adjustment

If trouble can not be corrected with previous adjustments, continue with following adjustments:

5. Float Level; Lateral and Vertical Adjustment
6. Float Drop Adjustment
7. Pump Adjustment
8. Metering Rod Adjustment
9. Bowl Vapor Vent Adjustment
10. Unloader Adjustment
11. Secondary Throttle Lever Adjustment
12. Secondary Throttle Lock Out Adjustment
13. Repeat Adjustment 1, 2 and 3.

www.carburetor-manual.com

Accelerator Linkage Adjustment

The carburetor, no matter how carefully adjusted will not provide satisfactory car performance unless proper attention is given to linkage adjustment.

Linkage is very critical due to method of mounting and consequently care should be stressed in adjusting linkage so as to overcome all manufacturing variables.

Following is adjustment outlined for 8 cylinder models with four barrel carburetor. In each instance dimension of 3/4" or 1" between accelerator pedal rod and floor is with floor mat removed. All references are to Fig. 10-C.

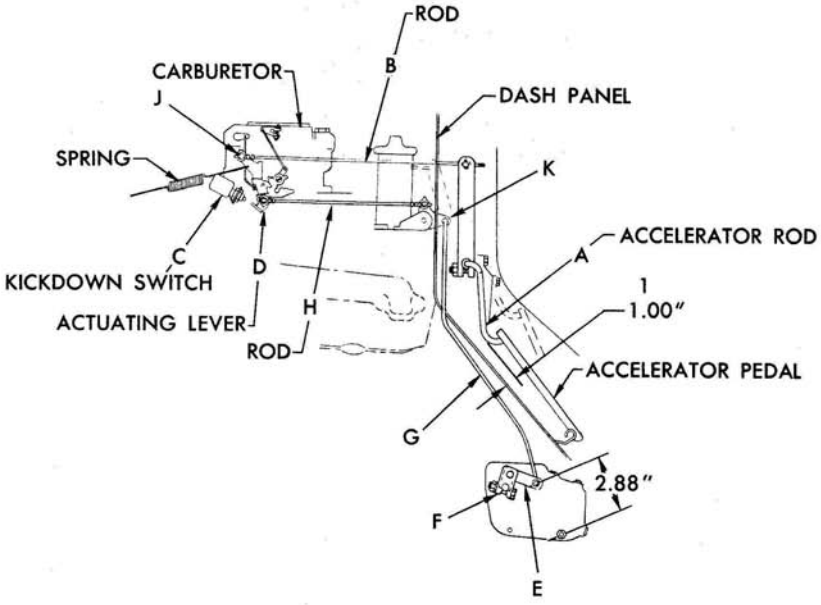

Fig. 10-C Eight Cylinder - Power Package - Linkage Adjustment

3 SPEED ADJUSTMENT

1. With accelerator rod A positioned as shown, adjust rod B to give wide open position.

OVERDRIVE ADJUSTMENT

1. With accelerator rod A positioned as shown, adjust rod B to give wide open throttle. Adjust switch C so that actuating lever D at full throttle position rests against end of threaded barrel of kick-down switch.

www.carburetor-manual.com

1. Loosely assemble lever E to clamp F.
2. Insert gauge J-5906 between transmission left hand side cover lower rear bolt and lower hole in lever E. (2.88 dimension between bolt and hole centerlines). With gauge in place, and holding clamp F counterclockwise in full detent position, tighten lever E to clamp F. Remove gauge.
3. Install rod G.
4. Install rod H in carburetor. Place lever J in wide open position and pull rod G upward until it is stopped by transmission internal stop. Adjust swivel in rod H for easy entrance in lever K before fixing swivel in lever K.
5. Check adjustment by placing linkage in idle position, then returning to wide open position by rotating lever J, push upward on lever E and note if rod deflects, meaning transmission is not on internal stop. If rod deflects or lever E will not reach wide open position, repeat adjustment 4.
6. With accelerator pedal depressed, placing lowest point on accelerator rod 1" above toe panel and lever J rotated to wide open position, adjust swivel in rod B for free entry of rod B into lever J before fixing rod B to lever J.
7. Check adjustment by releasing, then depressing accelerator pedal, check lever J for wide open position. If lever J will not reach wide open position, repeat step 6.

Idle Speed and Mixture

1. Connect tachometer and vacuum gauge to engine. Set parking brake and place transmission in neutral.
2. With a thoroughly warmed-up engine, check to see that choke is fully off and carburetor is on slow idle.
3. Start engine and allow to idle. Adjust idle speed adjustment screw (Fig. 11-C) to give 450 RPM (425 on Powerglide models).
4. (On Powerglide models, move selector lever to Drive Range.) Adjust each idle mixture adjustment screw (Fig. 11-C) separately to give peak vacuum and RPM indications on tachometer and vacuum gauge.

   CAUTION: Do not turn idle mixture adjustment screws tightly against stop or damage to needle seat will result.

www.carburetor-manual.com

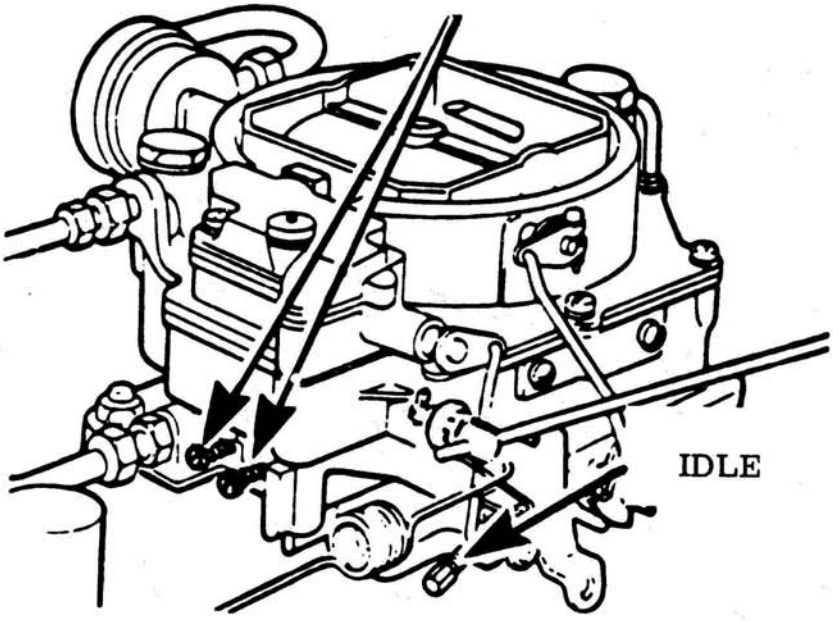

Fig. 11-C Idle Speed and Mixture Screws

5. If necessary, readjust engine idle to 450 RPM on standard shift models, 425 RPM on Powerglide models with Selector Lever in Drive Range. Readjust idle mixture adjustment screws as outlined in step 4.

6. Stop engine and remove tachometer and vacuum gauge.

7. Road test vehicle to check performance.

Fast Idle (On Car)

Engine should be thoroughly warmed-up. Adjust engine to 1800 RPM with idle adjusting tang on high step of fast idle cam.

Automatic Choke Adjustment

Normal setting of the choke is such that the index mark on the plastic cover is lined up with the molded center mark on the choke housing.

www.carburetor-manual.com

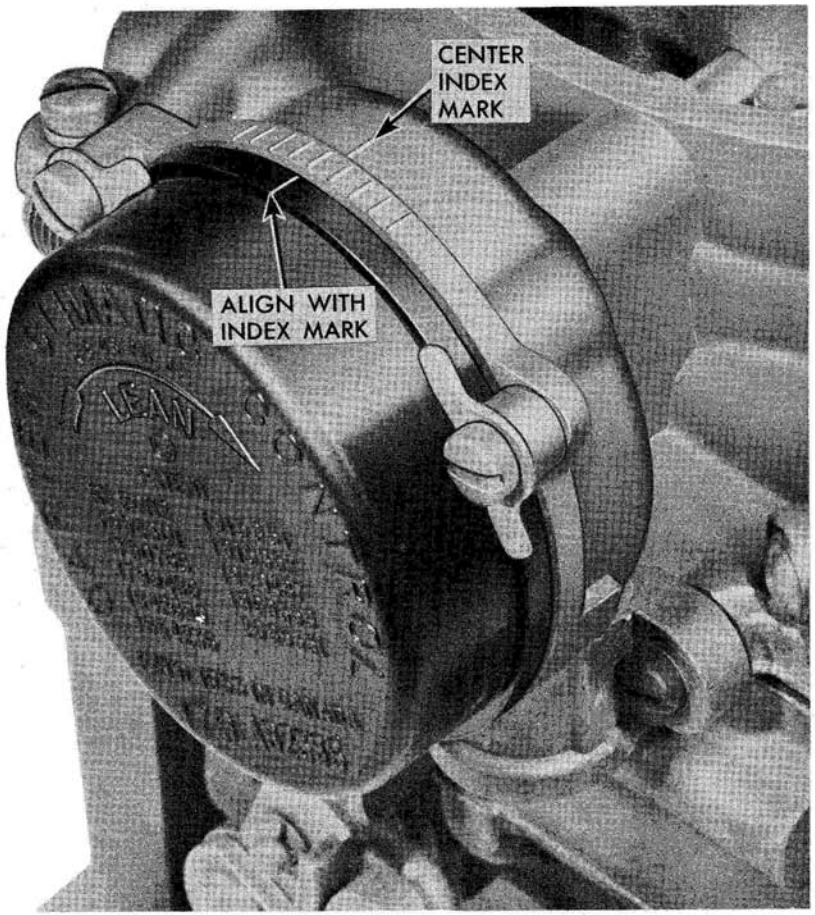

Fig. 12-C Choke Adjustment

Float Adjustment

1. Remove bowl cover, then disassemble and reassemble floats without gasket for adjustment as outlined in "Bowl Cover Lower Components" of "Disassembly".

2. Lateral adjustment. (Fig. 13-C) Position float gauge J-5228 directly under the center of secondary float with notched portion of gauge fitted over edge of casting as illustrated. Sides of float should just clear vertical uprights of gauge; otherwise bend float arms as required. Repeat this adjustment on the primary float using gauge J-5457.

www.carburetor-manual.com

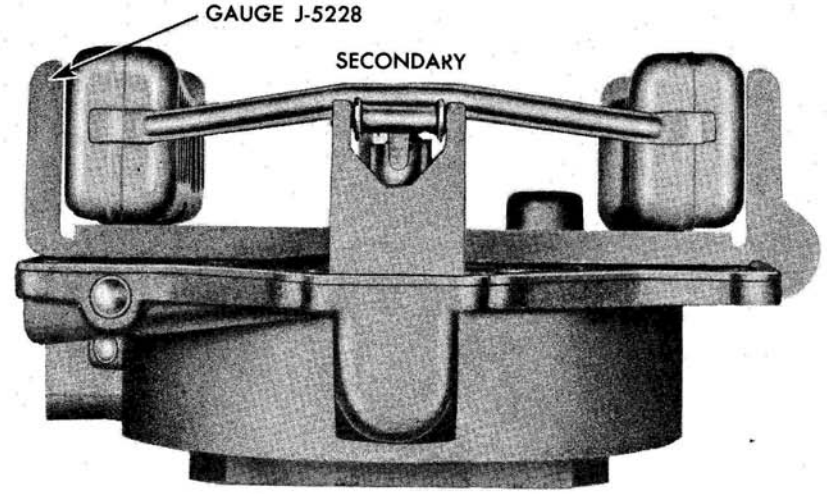

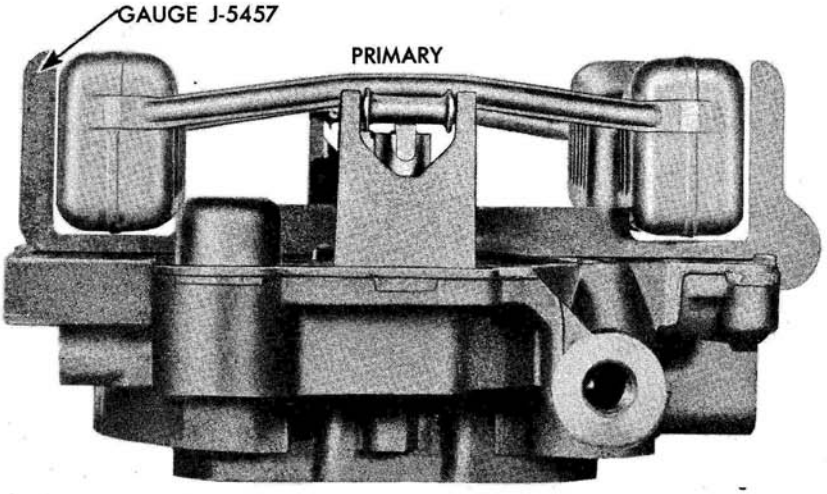

Fig. 13-C Measuring Primary and Secondary Float Lateral and Vertical Adjustment

3. Vertical adjustment (Fig. 13-C). With float gauges positioned as in the above, tops of floats should just clear the horizontal bar of gauges, otherwise bend arms of floats as required. Proper distance between top of floats and bowl cover is 1/4-inch on secondary floats (measured with gauge J-5228) and 1/8-inch on primary floats (measured with gauge J-5457).

www.carburetor-manual.com

Float Drop Adjustment

1. Drop measurement must be made with bowl cover gasket removed.

2. Float drop adjustment (Fig. 14-C). With bowl cover held in upright position and measuring from the center of the floats, the distance between the top of the floats and the bottom of the bowl cover should be 5/8-inch for primary floats and 3/4-inch for secondary floats (Fig. 14-C). Bend float tangs as required to achieve these distances.

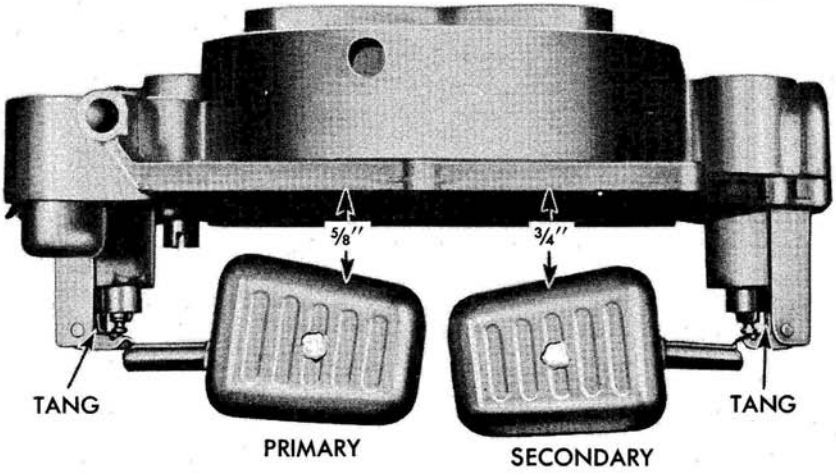

Fig. 14-C Float Drop Adjustment

Pump Adjustment

1. Check pump adjustment as follows:

   a. Back out idle speed adjustment screw.

   b. Hold gauge J-818-3 on dust cover boss as illustrated in Fig. 15-C.

   c. Visually check the relationship between the top flat of the pump arm (Fig. 15-C) and the gauge. Properly adjusted, these surfaces should be parallel.

   d. If necessary, correct adjustment by bending pump rod with bending tool J-5496.

www.carburetor-manual.com

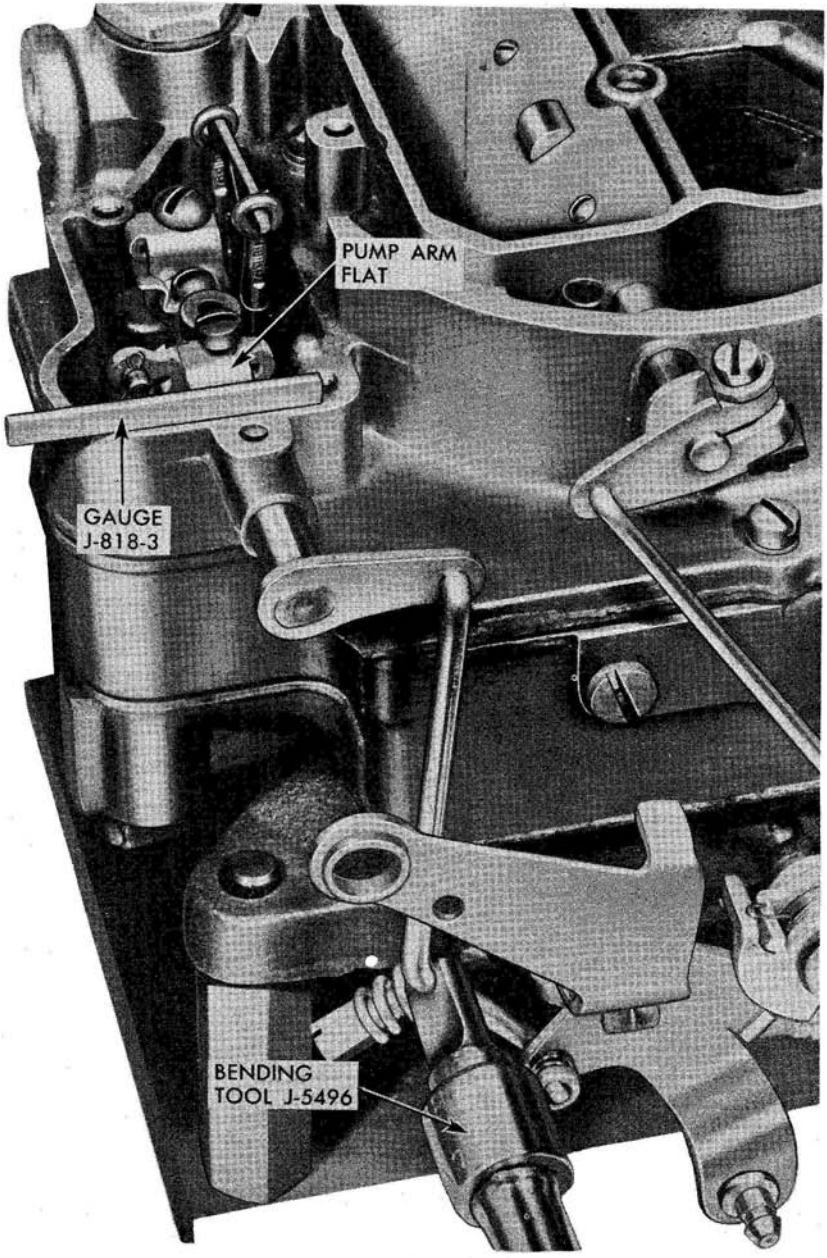

Fig. 15-C Pump Adjustment

www.carburetor-manual.com

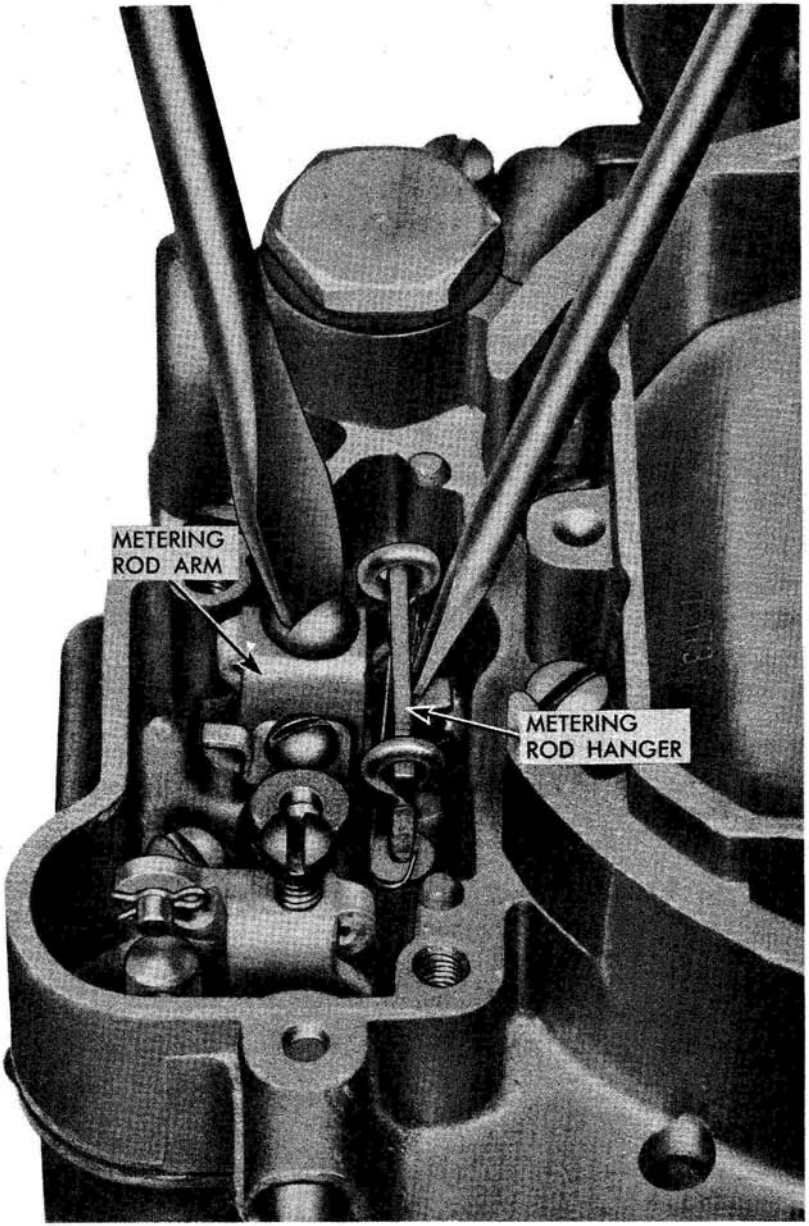

Fig. 16-C Metering Rod Adjustment

www.carburetor-manual.com

Metering Rod Adjustment

1. Adjust metering rods as follows:

   a. Back out throttle lever adjusting screw to allow throttle valves to seat fully and loosen screw in metering rod arm.

   b. Press down metering rod arm until rods bottom (Fig. 16-C).

   c. While holding metering rods down and with throttle valves seated, rotate metering rod arm (Fig. 16-C) upward until arm lightly contacts hanger. Lock arm in this position by tightening set screw.

2. Using a new cover gasket, install dust cover (Fig. 18-C) and check the vapor vent adjustment as follows:

Bowl Vapor Vent Adjustment

NOTE: This adjustment should be made after completing pump and metering rod adjustments.

1. With dust cover and dust cover gasket installed, back out throttle lever stop screw to allow throttle valves to seat in bores of carburetor.
2. Insert gauge J-6039 between lower edge of vapor vent and well in dust cover (Fig. 18-C).
3. Properly adjusted, the clearance should be 3/16 inch. Remove dust cover and bend vapor vent arm if adjustment is necessary.

Unloader Adjustment

1. Move the throttle linkage until the throttle valves are wide open as shown in Fig. 17-C.
2. Holding the linkage in this position, the distance between the inboard edge of the choke valve and the center wall of the bowl cover should be 3/16 inch. Measure with gauge J-818-3.
3. Bend unloader tang (Fig. 17-C) as required with bending tool J-1137 to achieve this adjustment.

Secondary Throttle and Lever Adjustment

NOTE: By looking down through the carburetor, throttle valve position can be observed. Primary and secondary valves should reach the wide-open position simultaneously.

www.carburetor-manual.com

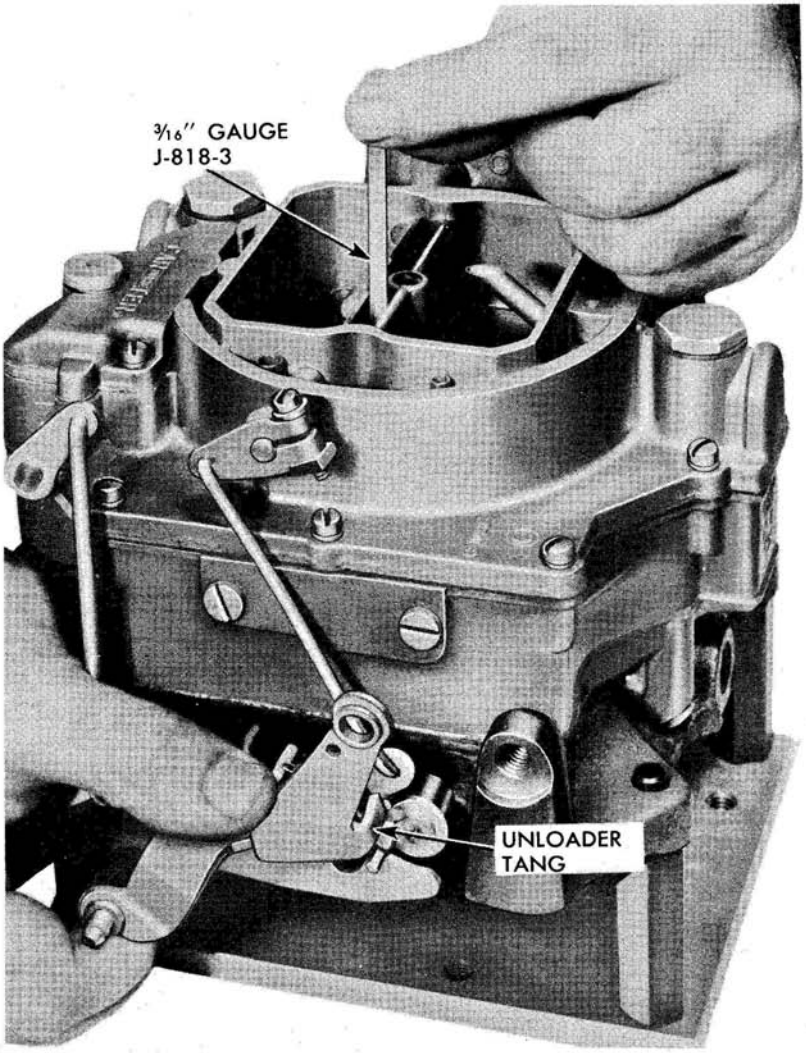

Fig. 17-C Unloader Adjustment

1. Operate throttle linkage until full wide open position is obtained. Observe valves as noted above.

2. To adjust, bend throttle operating rod at upper angle with tool J-5496 (Fig. 19-C).

3. Flip throttle several times to make sure throttle valves are closed.

www.carburetor-manual.com

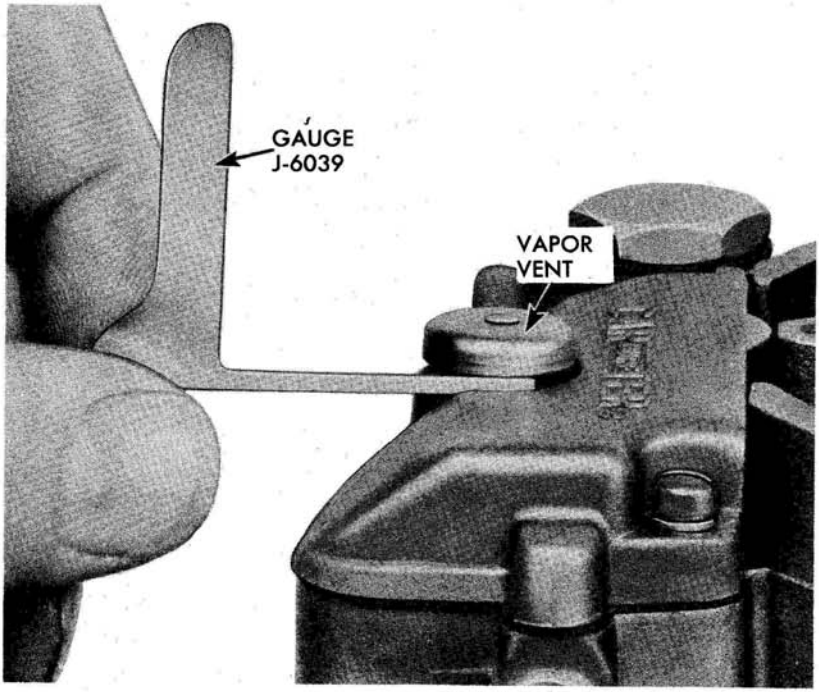

Fig. 18-C Bowl Vapor Vent Adjustment

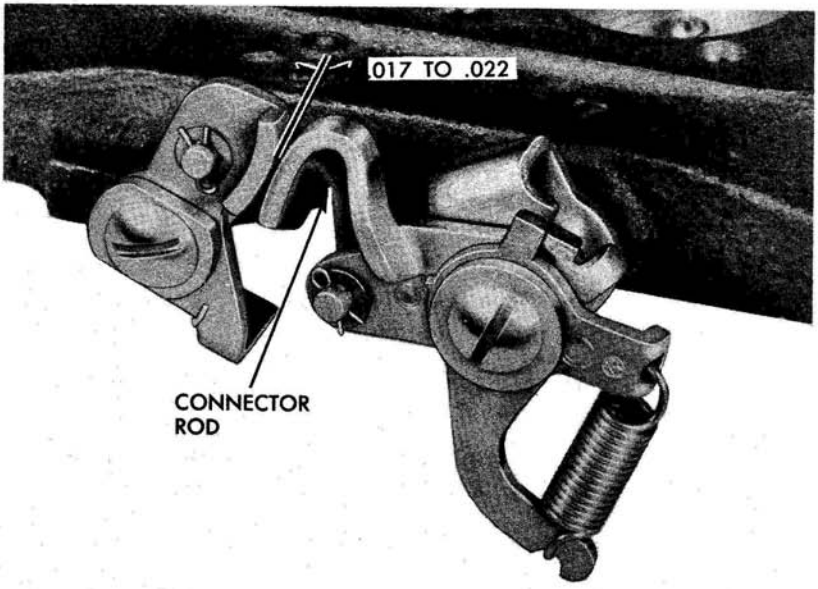

Fig. 19-C Secondary Throttle Lever Clearance

www.carburetor-manual.com

4. With throttle valves tightly closed there should be .017-.022 inch clearance between positive closing shoes on primary and secondary throttle levers.

5. To adjust, bend shoe on primary lever.

Secondary Throttle Lockout Adjustment

NOTE: This adjustment should be made after completing Fast Idle and Secondary Throttle Lever Adjustments.

1. Fully open the choke valve, then open both the primary and secondary throttle valves.

2. Close choke valve and hold shut, then release throttle valves. Tang on secondary throttle shaft should freely engage notch in secondary throttle lockout dog (Fig. 20-C).

3. If necessary to adjust, bend tang on secondary throttle shaft.

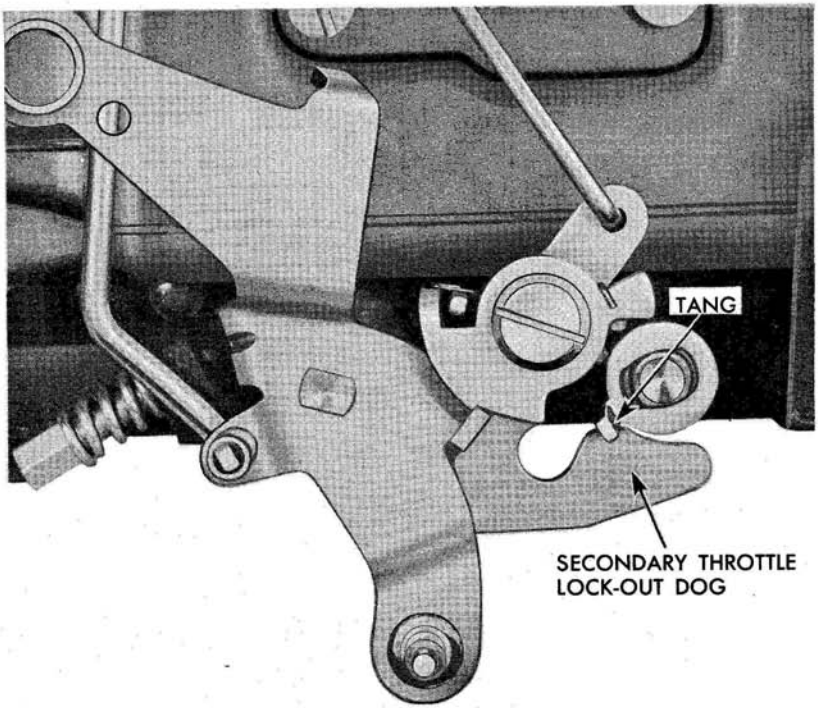

Fig. 20-C Secondary Throttle Lockout Adjustment

www.carburetor-manual.com

Disassembly

REMOVAL OF BOWL COVER UPPER COMPONENTS

NOTE: All references in this procedure are to Fig. 21-C.

1. Do not remove fuel in bowl. Remove two strainer well nuts and gaskets. Lift strainer out of strainer well in primary side of carburetor.

NOTE: Tap strainer nuts lightly with hammer before loosening with wrench.

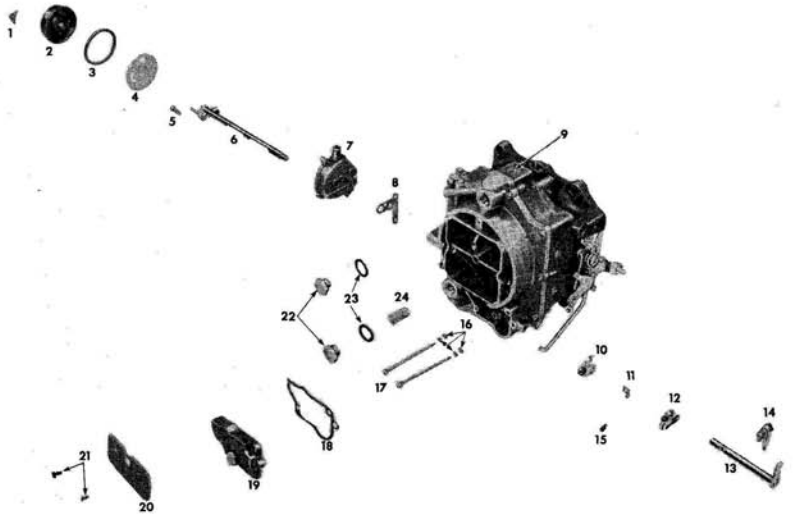

Fig. 21-C Bowl Cover - Upper Components Exploded

1. Choke Coil Cover Screws and Retainers
2. Choke Coil Cover
3. Choke Cover Gasket
4. Baffle Plate
5. Choke Housing Screws
6. Choke Shaft and Piston
7. Choke Housing
8. Choke Housing Gasket
9. Bowl Cover
10. Metering Rod Arm
11. Vent Arm
12. Pump Operating Arm and Link
13. Pump Counter Shaft
14. Choke Shaft Lever
15. Vent Arm Screw
16. Metering Rod Disks
17. Metering Rods
18. Dust Cover Gasket
19. Dust Cover
20. Choke Valve
21. Choke Valve Screw
22. Strainer Well Nut
23. Strainer Well Gasket
24. Strainer

www.carburetor-manual.com

2. Remove choke connector rod at both ends.
3. Remove retainer securing throttle rod to lever on pump countershaft and disconnect rod.
4. Remove metering rod dust cover and gasket by removing two screws.
5. Remove vapor vent arm attaching screw and arm.
6. Loosen, but do not remove screws securing pump operating arm and metering rod arm to countershaft and pull countershaft out of bowl cover. These parts are shown in their assembled positions in Fig. 22-C.

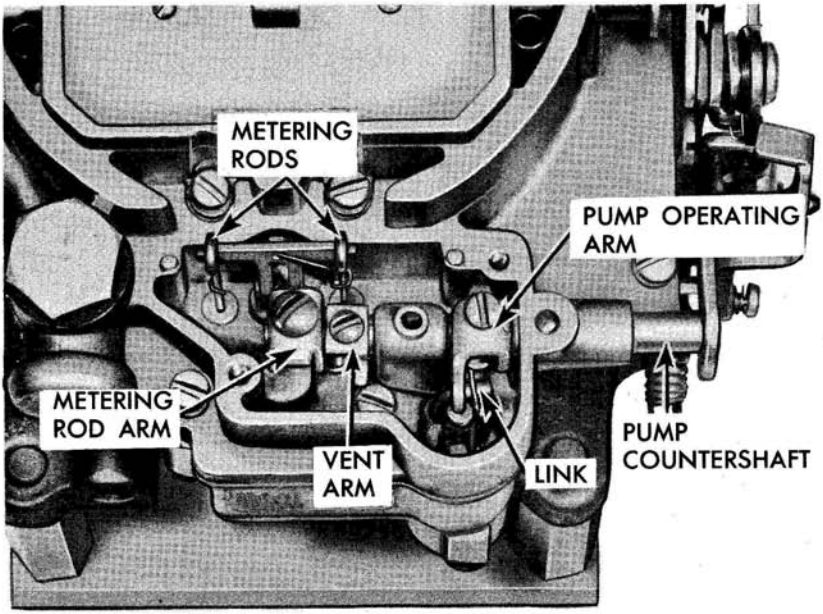

Fig. 22-C Metering Rod Housing Components

7. Lift metering rod arm from metering rod well and remove spring retainer from link. Push link out of pump shaft and pump operating arm and remove arm and link.
8. Rotate each metering rod one-half turn and remove from hanger. Use care to prevent losing the four metering rod disks.
9. Unscrew three choke cover screws and retainers and remove choke coil cover gasket and baffle plate.

NOTE: Under normal service the carburetor bowl cover may be cleaned without further disassembly. If complete disassembly is necessary perform operations 10 and 11.

www.carburetor-manual.com

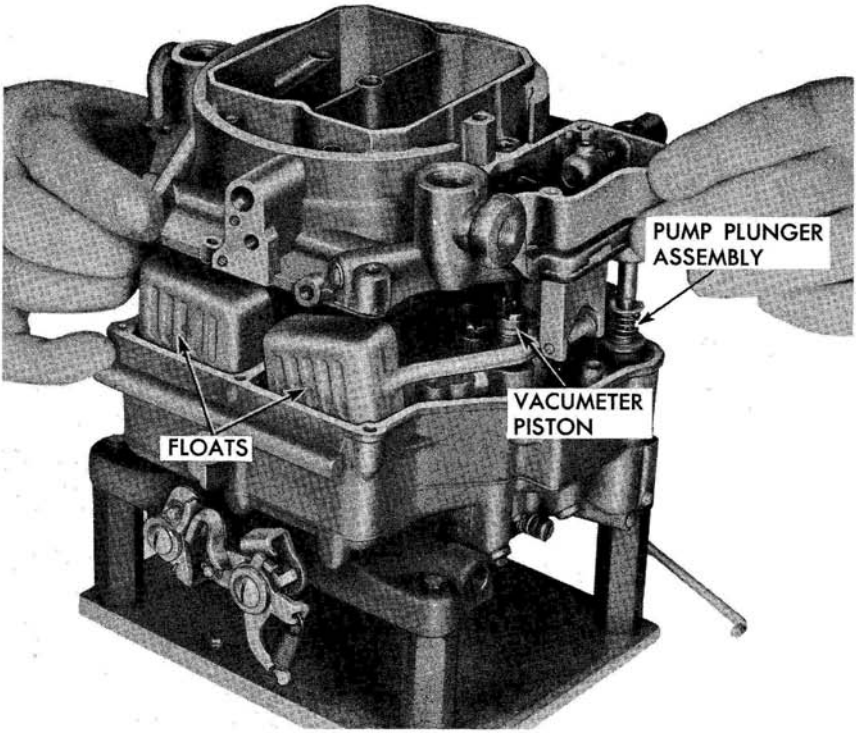

Fig. 23-C Removing Bowl Cover

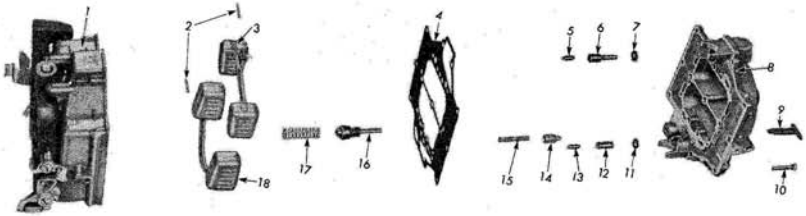

Fig. 24-C Bowl Cover - Lower Components Exploded

1. Carburetor Body
2. Float Hinge Pins
3. Secondary Float
4. Bowl Cover Gasket
5. Secondary Float Needle
6. Secondary Float Needle Seat
7. Needle Seat Gasket
8. Bowl Cover
9. Vacumeter Link
10. Bowl Cover Attaching Screw (16)
11. Needle Seat Gasket
12. Primary Float Needle Seat
13. Primary Float Needle
14. Vacumeter Piston
15. Vacumeter Piston Spring
16. Pump Plunger Assembly
17. Pump Plunger Return Spring
18. Primary Float

www.carburetor-manual.com

10. Rotate choke shaft counterclockwise to lift attached piston out of choke housing and remove shaft and piston. Remove two choke valve screws and choke valve.

11. Unscrew three choke housing screws securing housing to bowl cover and remove choke housing and gasket.

REMOVAL OF BOWL COVER LOWER COMPONENTS

NOTE: All references in this procedure are to Fig. 24-C.

1. Remove 16 bowl cover attaching screws. Lift bowl cover straight up to prevent damaging floats, vacumeter piston, or pump plunger assembly (Fig. 23-C). To avoid bending floats, be sure bowl cover gasket is not sticking to bowl.

2. Place bowl cover upside down on a clean work bench. Remove two float hinge pins and lift out secondary and primary floats. Mark and group floats to identify as primary and secondary. This eliminates unnecessary bending of floats during assembly adjustments due to misplaced floats.

3. Remove secondary float needle, seat and gasket. Group needle and seat to prevent mismatch at assembly.

4. Remove and group primary float needle seat and gasket.

5. Lift pump plunger assembly out of bowl cover and remove return spring from carburetor body.

6. Rotate vacumeter piston 90-degrees to disconnect from vacumeter link and remove hanger. Lift vacumeter spring out of carburetor body.

7. Remove bowl cover gasket.

CARBURETOR BODY

NOTE: All references in this procedure are to Fig. 26-C.

1. Remove pump plunger assembly and lower pump spring.
2. Remove vacumeter spring.
3. Check the fuel in the bowl for contamination by dirt, water, gum or other foreign matter, then drain fuel from bowl.

   NOTE: A magnet swept around bottom of bowl while fuel is still present will pick up iron oxide dust or metal particles which have tendency to cause leakage at needle seats.

www.carburetor-manual.com

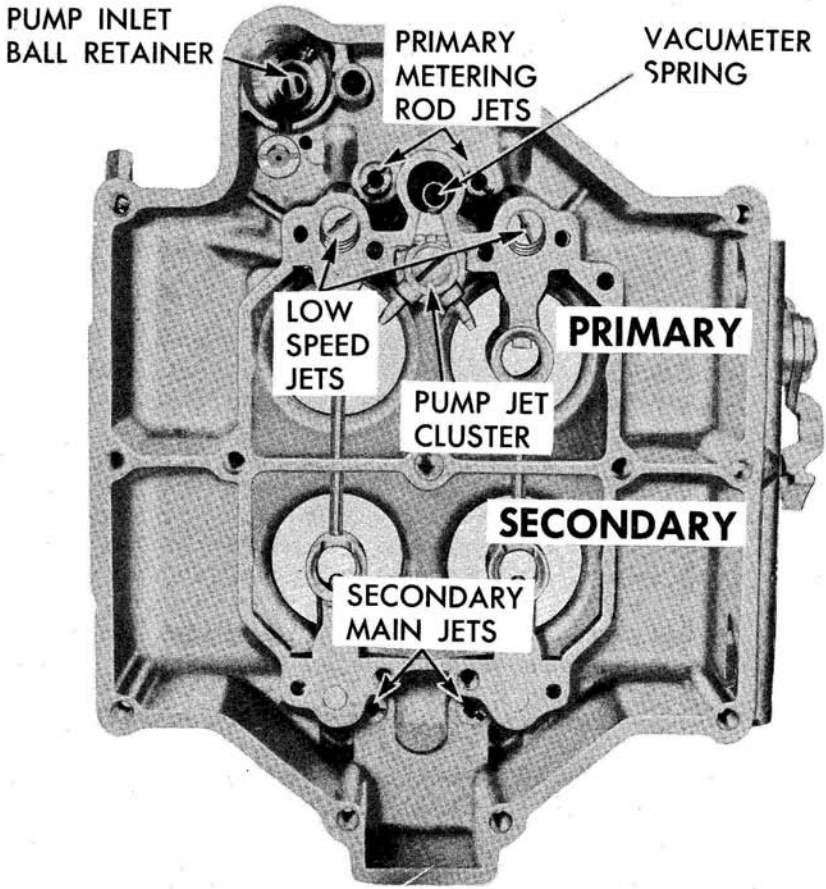

Fig. 25-C Carburetor Body Parts Location

4. Remove pump jet cluster attaching screw, then remove cluster and gasket.

5. Invert carburetor and remove small pump (brass) discharge needle.

6. Remove pump inlet ball retainer and check ball from bottom of pump cylinder well by prying the retainer sideways with a 5/16-inch six point socket.

7. Remove pump passage bleed plug.

8. Remove 2 primary metering rod jets (located on pump side of carburetor).

www.carburetor-manual.com

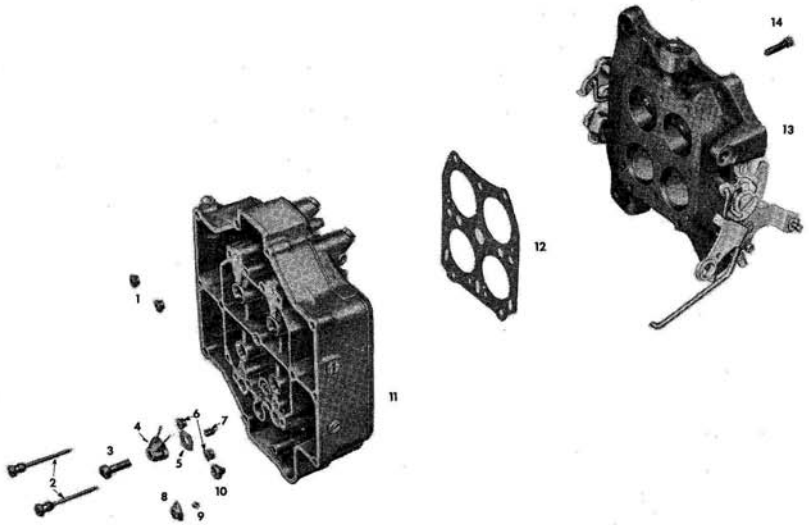

Fig. 26-C Carburetor Body - Exploded View

1. Secondary Jets
2. Low Speed Jet Tubes
3. Pump Jet Cluster Attaching Screw
4. Pump Jet Cluster
5. Cluster Gasket
6. Metering Rod Jets
7. Pump Discharge Needle
8. Pump Inlet Ball Retainer
9. Pump Inlet Ball
10. Pump Passage Plug and Gasket
11. Carburetor Body
12. Carburetor Body Gasket
13. Throttle Flange
14. Throttle Flange Attaching Screw

9. Remove two secondary main jets.

   NOTE: Primary metering rod jets have different openings than the secondary main jets. Never mix these jets.

10. Remove two low speed jets (primary side).

    NOTE: The low speed jets are installed at slight angle. The anti-percolator plugs and bushings, and main discharge nozzles are pressed in place and should not be removed.

11. Remove six throttle flange attaching screws (Fig. 26-C) and separate the throttle flange and carburetor body.

12. Remove gasket from carburetor body.

www.carburetor-manual.com

THROTTLE FLANGE

NOTE: All references in this procedure are to Fig. 27-C.

1. Remove two idle mixture screws and springs.
2. Remove throttle lever adjusting screw washer and spring.

NOTE: Under normal service the carburetor flange may be cleaned without further disassembly. If complete disassembly is necessary, perform the remaining operations.

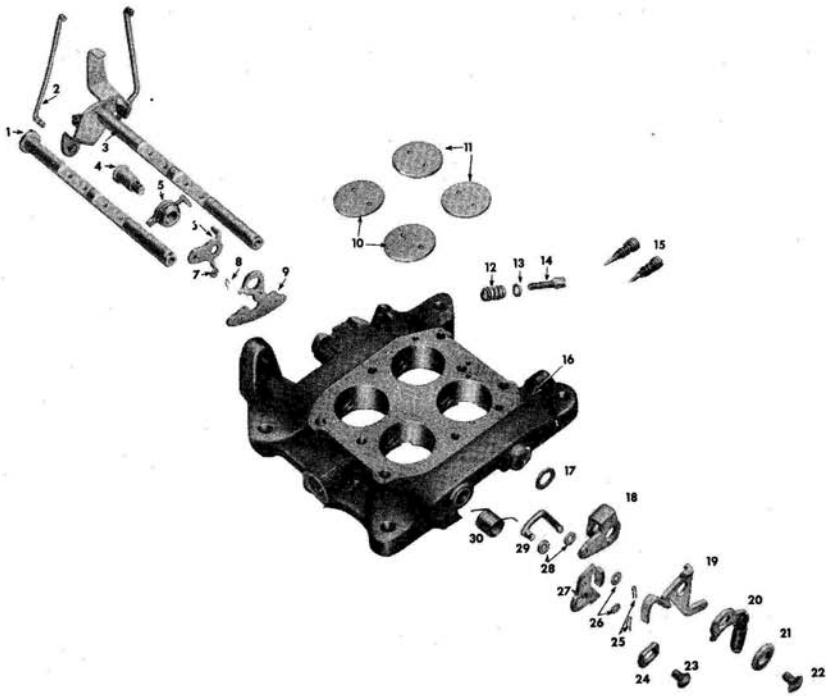

Fig. 27-C Throttle Flange Exploded

1. Secondary Throttle Shaft
2. Choke Connector Rod
3. Primary Throttle Shaft
4. Fast Idle Cam Retaining Screw
5. Fast Idle Cam Assy.
6. Lower Choke Lever
7. Bearing Washer
8. Spring Retainer
9. Secondary Lockout Lever
10. Secondary Throttle Valves
11. Primary Throttle Valves
12. Spring
13. Washer
14. Throttle Lever Adjusting Screw
15. Idle Adjusting Screw and Springs
16. Throttle Flange
17. Thrust Washer
18. Inner Primary Throttle Shaft Arm
19. Primary Throttle Shaft Dog
20. Outer Primary Throttle Shaft Lever and Spring
21. Spacer
22. Shaft Screw
23. Shaft Screw
24. Spacer
25. Spring Retainer
26. Bearing Washer
27. Secondary Throttle Lever
28. Bearing Washer
29. Primary-to-Secondary Connector
31. Secondary Throttle Return Spring

www.carburetor-manual.com

3. Remove fast idle cam retaining screw, fast idle cam assembly and lockout arm spring.

4. Remove primary to secondary connector rod pin springs and washers, then remove rod.

5. Remove primary throttle shaft screw and washer.

6. Remove primary throttle levers and spring as an assembly.

7. Remove primary throttle shaft spring thrust washer.

8. Remove secondary throttle shaft screw and washer. Unhook secondary throttle return spring, remove secondary throttle lever and return spring.

9. File off staked ends of throttle valve attaching screws and remove screws and throttle valves from the bores.

10. Remove primary and secondary throttle shafts.

CLEANING AND INSPECTION

The most frequent causes of carburetor malfunction are gum, dirt, carbon, and water. For this reason, carefully clean and inspect all parts and castings while the carburetor is being serviced.

1. a. Wash all parts in carburetor cleaning solution except choke coil housing assembly and pump plunger.

   b. Choke coil housing assembly should be cleaned in gasoline.

2. Inspect holes in all operating levers and castings for excessive wear.

3. Inspect bearing surfaces of all shafts for excessive wear.

   NOTE: If excessive wear is noted to the extent of improper operation of the carburetor, the worn parts should be replaced.

4. Inspect floats for bad dents and/or possible leaks.

5. Inspect pump plunger leather for cracks or creases.

6. If choke piston sticks in cylinder, remove welch plug in bottom of housing for inspection of cylinder and air slots. If carbon or dirt is present, remove carbon from cylinder with sandpaper (DO NOT USE EMERY CLOTH) and clean slots.

www.carburetor-manual.com

Carefully install new welch plug. Be certain welch plug seat is carefully cleaned before installing new plug.

NOTE: Removal of the welch plug to clean the choke piston housing should be done only if the choke piston does not move freely in its cylinder.

7. Inspect float needles and seals for burrs and ridges. If present, replace both the needle and seat; never replace either alone.

8. Inspect metering rods and jets. If either are bent, burred, or distorted, replace both rod and jet.

9. Inspect edges of primary and secondary throttle valves for gouges and other deformations. If these or any other conditions exist which would prevent full seating, replace the faulty valve.

10. Check pump plunger return spring and vacumeter spring for weakness and distortion.

11. Inspect all mating surfaces of choke housing, bowl cover, carburetor body, and throttle flange for burrs, gouges, or other surface irregularities. All surfaces must be smooth to prevent leaks.

Assembly

THROTTLE FLANGE

1. Install the primary and secondary throttle shafts as illustrated in Fig. 28-C.

2. Position primary throttle valve (Fig. 28-C) with the stamped number "2-92" facing the manifold side and toward the center of the throttle flange. Cant the shaft and valves toward the center of the flange until the throttle valves seat fully and install new throttle valve screws.

3. Place secondary throttle valves with the number "2-191" facing the manifold side and toward the center of the throttle flange. Complete installation as in step 2 above.

4. Install two idle mixture screws and springs (Fig. 27-C) finger tight, then back out one (1) turn as a temporary adjustment. Do not overtighten screws as this can deform seating surfaces.

www.carburetor-manual.com

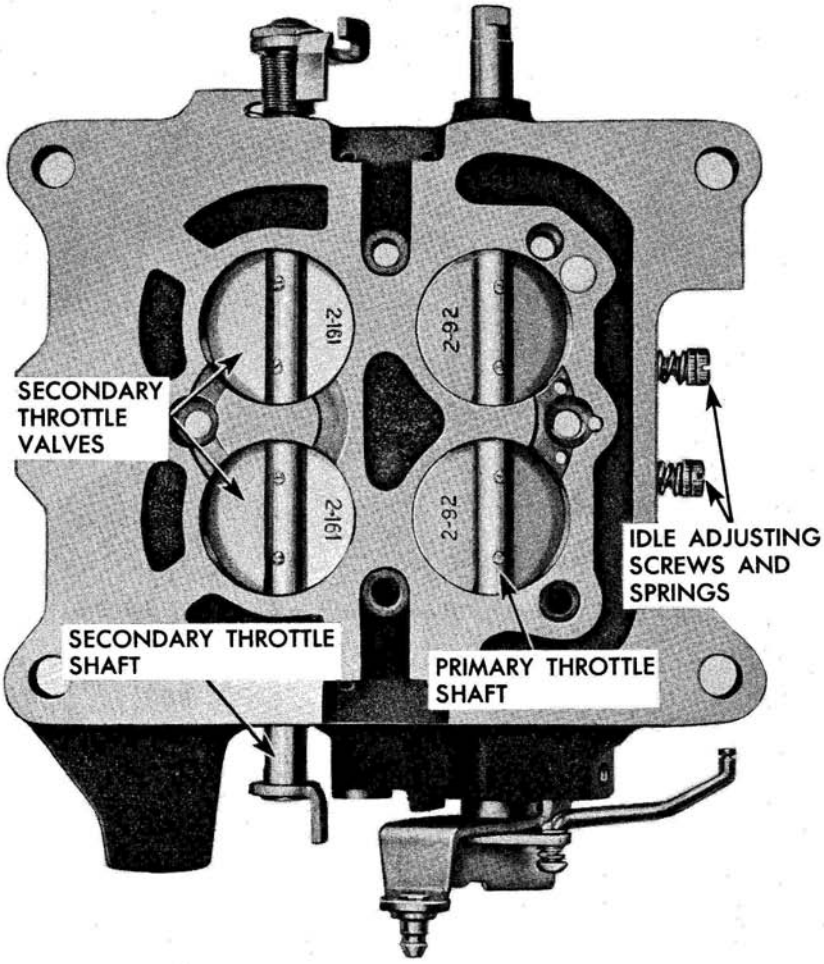

Fig. 28-C Position of Throttle Valves

5. Install secondary throttle return spring, lever, and spacer (Fig. 29-C) on secondary throttle shaft and secure with screw. Place straight end of spring in boss groove on flange. Using a piece of hooked wire, wind spring 1 1/2 turns clockwise and hook spring onto secondary throttle lever as illustrated.

6. Install thrust washer inner primary throttle shaft arm, primary throttle shaft dog, and outer primary throttle shaft lever on primary throttle shaft. Adjust parts relationship as illustrated in Fig. 29-C, then install spacer and screw.

www.carburetor-manual.com

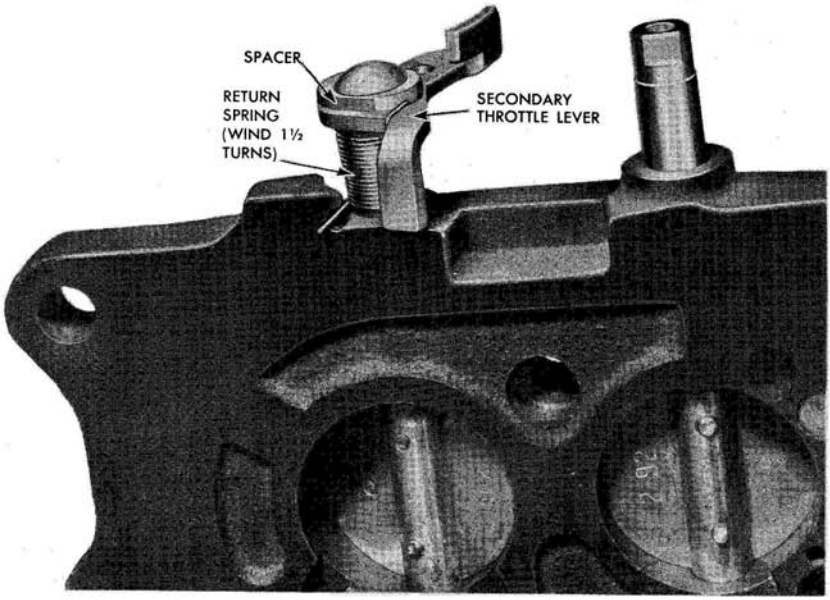

Fig. 29-C Secondary Throttle Lever and Spring Installation

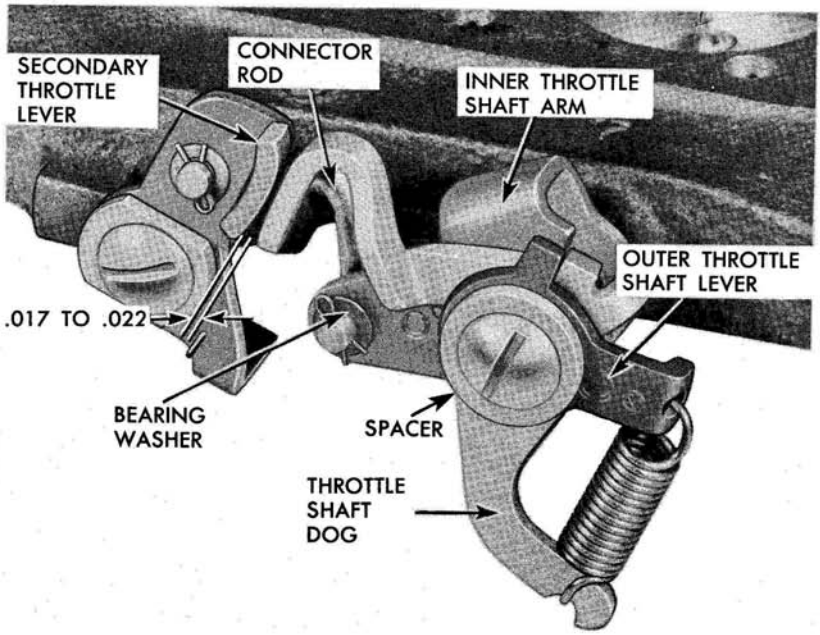

Fig. 30-C Primary Throttle Shaft Components

www.carburetor-manual.com

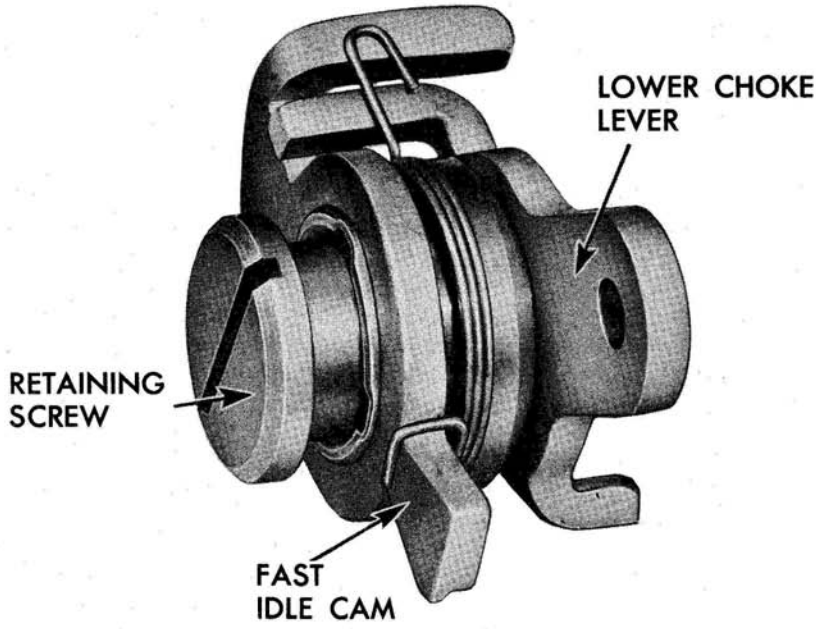

Fig. 31-C Assembly of Fast Idle Cam and Lower Choke Lever

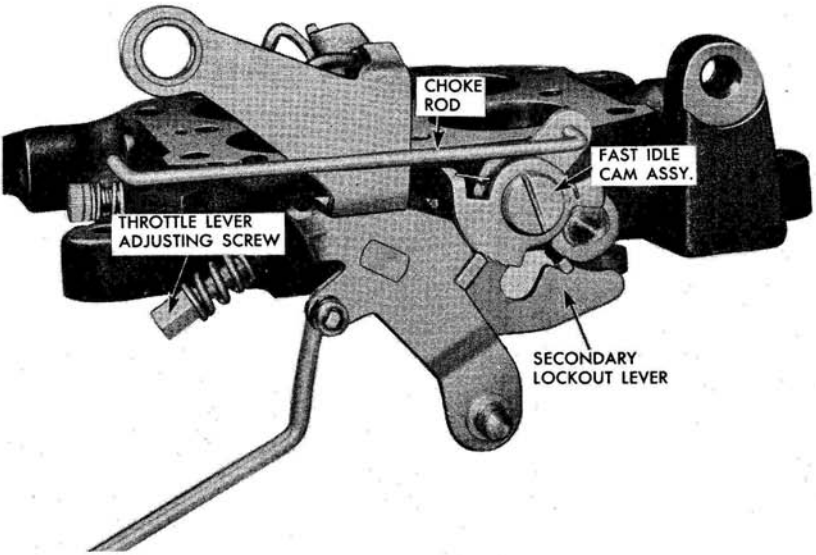

Fig. 32-C Fast Idle Cam and Secondary Lockout Lever Installation

www.carburetor-manual.com

7. Hook spring attached to outer throttle shaft lever (Fig. 30-C) to arm of throttle shaft dog.

8. Using a bearing washer (Fig. 30-C) on each side of the secondary throttle lever and inner throttle shaft arm, install connector rod (Fig. 30-C). Secure rod with two spring retainers.

9. Assemble the fast idle cam and lower choke lever on retaining screw (Fig. 31-C). Make certain tang of lower choke lever is installed under spring of fast idle cam as illustrated.

10. Position secondary lockout lever (Fig. 32-C) against boss of throttle flange and secure with retaining screw in fast idle cam assembly. Check that levers and cam operate freely after installation.

11. Install choke rod (Fig. 32-C) in fast idle cam and secure with spring retainer.

12. Install throttle lever adjusting screw, spring and washer (Fig. 32-C).

CARBURETOR BODY

NOTE: All references in this procedure are to Fig. 26-C.

1. Install primary metering rod jets.

   NOTE: The primary metering rod jets have the large holes and must be installed in the primary side of the carburetor. This is the pump cylinder side of the carburetor body.

2. Install secondary main jets.

3. Install two low speed jets on primary side of carburetor.

   CAUTION: Low speed jets are mounted on slight angle. Do not attempt installation of jets to align with upper edge of bowl.

4. Install steel pump inlet ball check and retainer (Fig. 26-C).

5. Install pump passage bleed plug.

6. Install brass pump discharge check needle. Be sure needle is installed point down.

7. Install pump discharge cluster gasket, cluster assembly and attaching screw.

www.carburetor-manual.com

8. Install vacumeter spring (Fig. 24-C) in vacumeter bore.

   NOTE: The vacumeter spring affects both economy and performance. If vacumeter piston spring appears to be damaged or distorted, it should be replaced. If any doubt exists, use a new spring for comparison.

9. Install lower pump spring (Fig. 24-C) in pump cylinder.

BOWL COVER LOWER COMPONENTS

1. Place bowl cover upside down on bench and install primary and secondary float needles and seats, using new seat gaskets.

   CAUTION: Do not interchange primary and secondary needles or seats. Also, if it was deemed necessary to replace any needle or seat during inspection, be sure to replace both the float needle and seat as a pair.

2. Without installing bowl cover gasket, temporarily attach both the primary and secondary floats for adjustment. Be sure to reinstall floats on side from which they were removed to prevent unnecessary bending.

3. Three separate adjustments must be made on both the primary and secondary floats (Fig. 13-C): lateral, vertical, and float drop.

   NOTE: All float adjustments are outlined under "Adjustments On The Car" under "Care, Maintenance and Adjustments".

4. Remove floats and install a new bowl cover gasket.

5. Install vacumeter link and vacumeter piston with lip on link toward air horn.

6. Insert pump shaft through bowl cover and retain in position with link and pump arm assembly.

7. Reinstall the primary and secondary float assemblies.

   CAUTION: Be certain the float and needle assemblies are assembled to match the correct needle seat.

8. Carefully position the bowl cover assembly on the carburetor body being sure the vacumeter piston and pump plunger are aligned so they enter their respective bores.

www.carburetor-manual.com

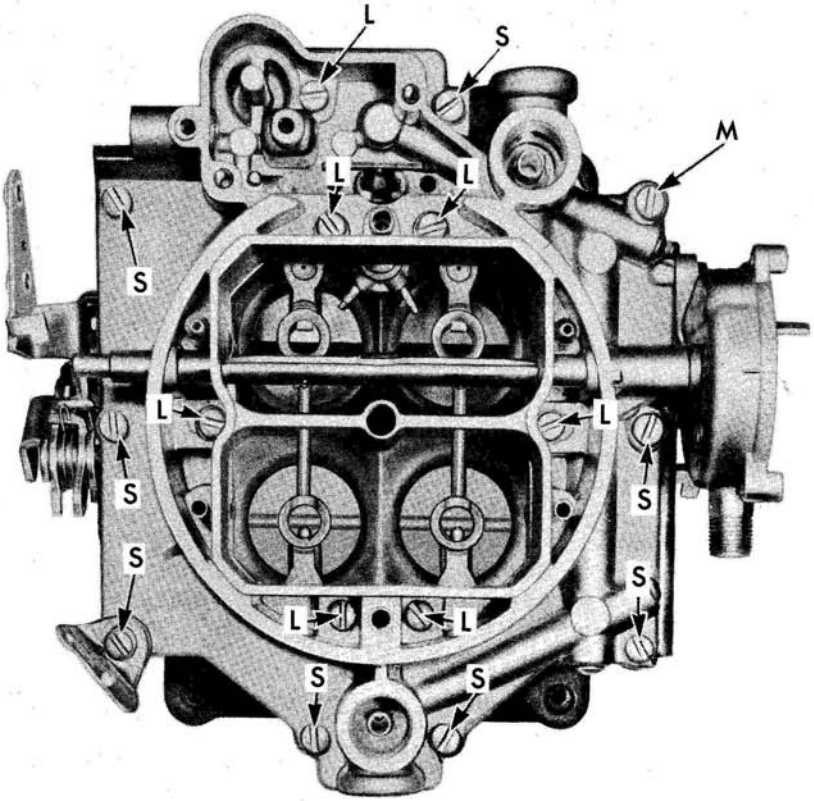

L—LONG M—MEDIUM S—SHORT

Fig. 33-C Location of Bowl Cover Attaching Screws

9. Install 16 bowl cover attaching screws. Determine proper location of different length screws from Fig. 33-C.

10. Tighten all screws evenly, working from the inner located screws to the screws located around the outer edge of the carburetor.

BOWL COVER UPPER COMPONENTS

NOTE: All number references in this procedure are to Fig. 21-C.

1. Install metering rods as follows: Use metering rod to position metering rod disks over holes in bowl cover disks with smaller disk hole on top. Catch metering rod spring loop

www.carburetor-manual.com

with lower end of rod before rod is inserted, then twist "eye" of rod onto vacumeter piston link assembly.

2. Place metering rod arm in place.

3. Install pump countershaft by sliding shaft through pump operating arm and metering rod arm.

   CAUTION: Be certain metering rod operating arm is positioned in slot in vacumeter piston link.

4. Tighten pump arm screw.

5. Install vapor vent arm and attaching screw.

6. Place washer on lower end of throttle connector rod, install rod into throttle lever while holding lever in closed position and retain with spring and retainer.

7. Install throttle connector rod in pump countershaft lever and retain with pin spring.

8. If bowl cover has been completely disassembled perform steps 9, 10, and 11. Install choke piston housing and new gasket.

9. Install choke shaft and piston assembly through bowl cover while guiding piston into cylinder.

10. Place choke valve in position on choke shaft with the "C" (in circle) on valve visible from the top of the carburetor. Center choke valve and install screws. Use new screws.

    NOTE: Make sure that neither valve nor shaft binds in any position and that valve drops free by its own weight.

11. Install choke operating lever on shaft. Tighten screw only enough to permit lever to be moved.

12. Position baffle plate into choke housing.

13. Install choke coil housing and new gasket on piston housing with index mark on plastic housing at the bottom, and retain with 3 screws and retainers. Leave coil housing in this position while making other adjustments.

14. Install choke connector rod in choke operating lever and choke lower lever, and retain lower end of rod with pin spring.

15. Install strainer plug, gasket, and strainer in primary side, and install strainer plug and gasket in secondary side if used.

www.carburetor-manual.com

16. Perform the following operations in their sequence, as outlined previously under "Adjustments on the Car" of "Care, Maintenance and Adjustments". (Step 3 is outlined below)

    1. Pump Adjustment
    2. Metering Rod Adjustment
    3. Fast Idle Adjustment (off engine)
    4. Bow Vapor Vent Adjustment
    5. Unloader Adjuster
    6. Secondary Throttle Lever Adjustment
    7. Secondary Throttle Lock-Out Adjustment

Fast Idle Adjustment (Off Engine)

1. Loosen choke lever clamp screw on choke shaft (Fig. 34-C)

2. Insert .020 gauge J-1388 between lip of fast idle cam and boss of throttle flange.

3. Holding choke valve tightly closed, pull choke shaft lever upward as illustrated to eliminate all slack from linkage and tighten screw in choke lever clamp.

4. Invert carburetor and place fast idle tang on high step of fast idle cam.

5. Holding choke valve tightly closed, bend fast idle adjusting tang until there is .015 inch gauge KMO-657 opening between throttle valve and bore of carburetor side opposite idle port (Fig. 35-C).

   NOTE: Fast idle adjusting tang must be on high step of cam while making this adjustment.

Test Before Installation On Engine

It is good shop practice to fill the carburetor bowl before installing the carburetor. This reduces the strain on the starting motor and battery and reduces the possibility of backfiring while attempting to start the engine. A fuel pump clamped to the bench, a small supply of fuel and the necessary fittings enable the carburetor to be filled and the operation of the float and intake needle and seat to be checked. Operate the throttle several times and check the discharge from the pump jets before installing the carburetor.

www.carburetor-manual.com

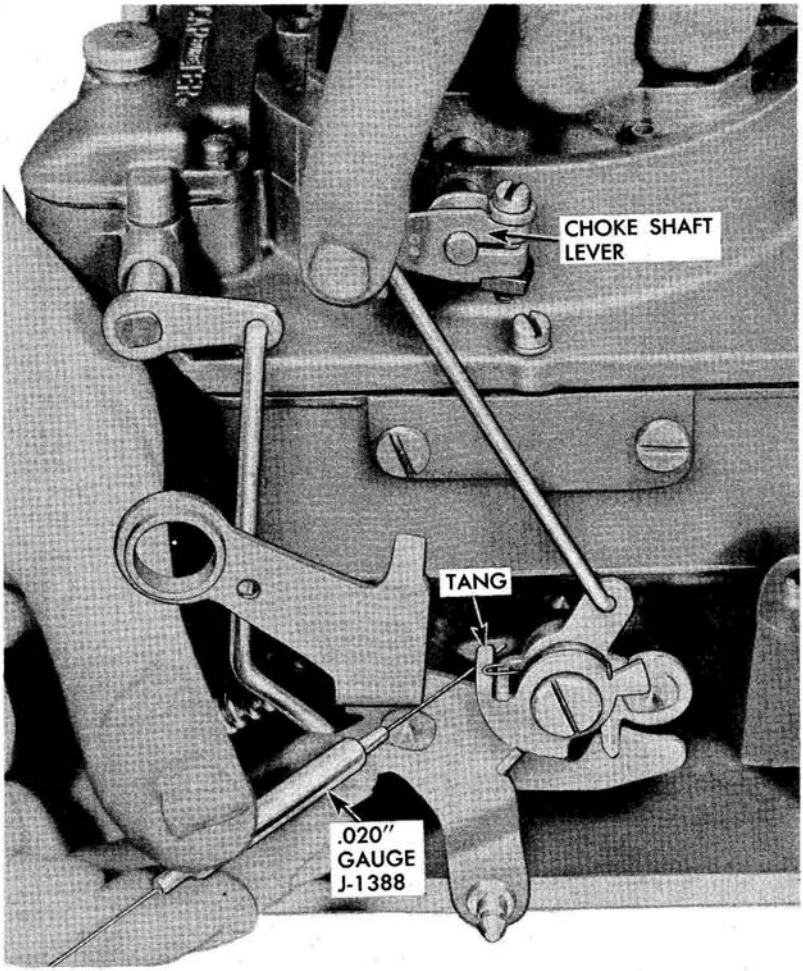

Fig. 34-C Correcting Choke Linkage For Fast Idle Adjustment

Installation

1. Be certain throttle flange and intake manifold gasket surfaces are clean.
2. Install new carburetor to manifold gasket over manifold carburetor studs.
3. Start spark control pipe fitting into carburetor fitting.
4. Lower carburetor onto manifold studs, choke housing to right side of vehicle.

www.carburetor-manual.com

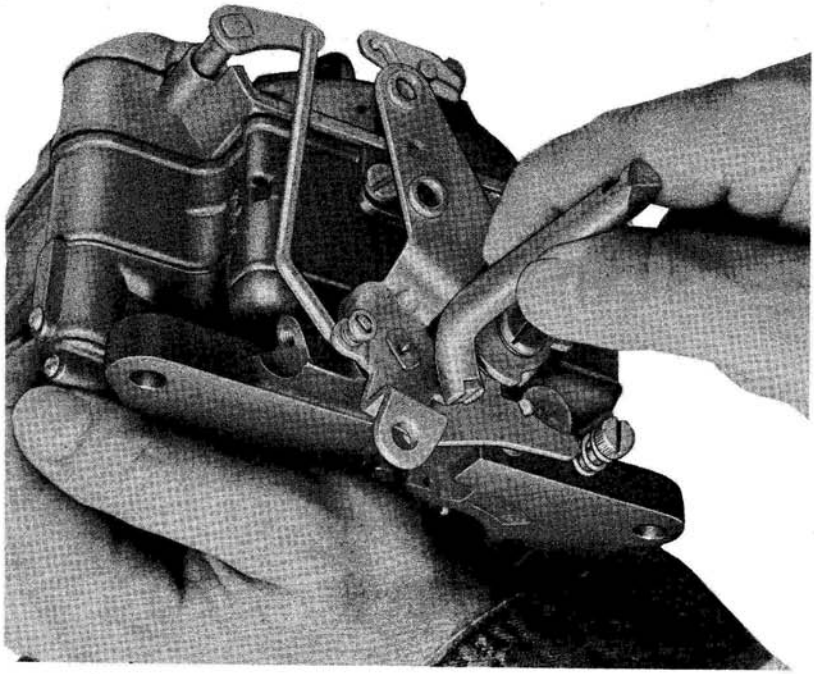

Fig. 35-C Setting Fast Idle Adjusting Tang

5. Install and tighten securely four washers and nuts, using a short, open end wrench. (On overdrive models, install and adjust kickdown switch, see page 52 of this booklet.

   NOTE: Copper washers are used on two front studs.

6. Tighten spark control pipe fitting and connect and tighten choke heat tube, vacuum line and fuel line.

7. Install throttle rod and throttle return spring. (On Powerglide models, install transmission control rod).

8. Install air cleaner gasket, stud, air cleaner and wing nut. Tighten securely.

9. Adjust idle speed and mixture.

www.carburetor-manual.com

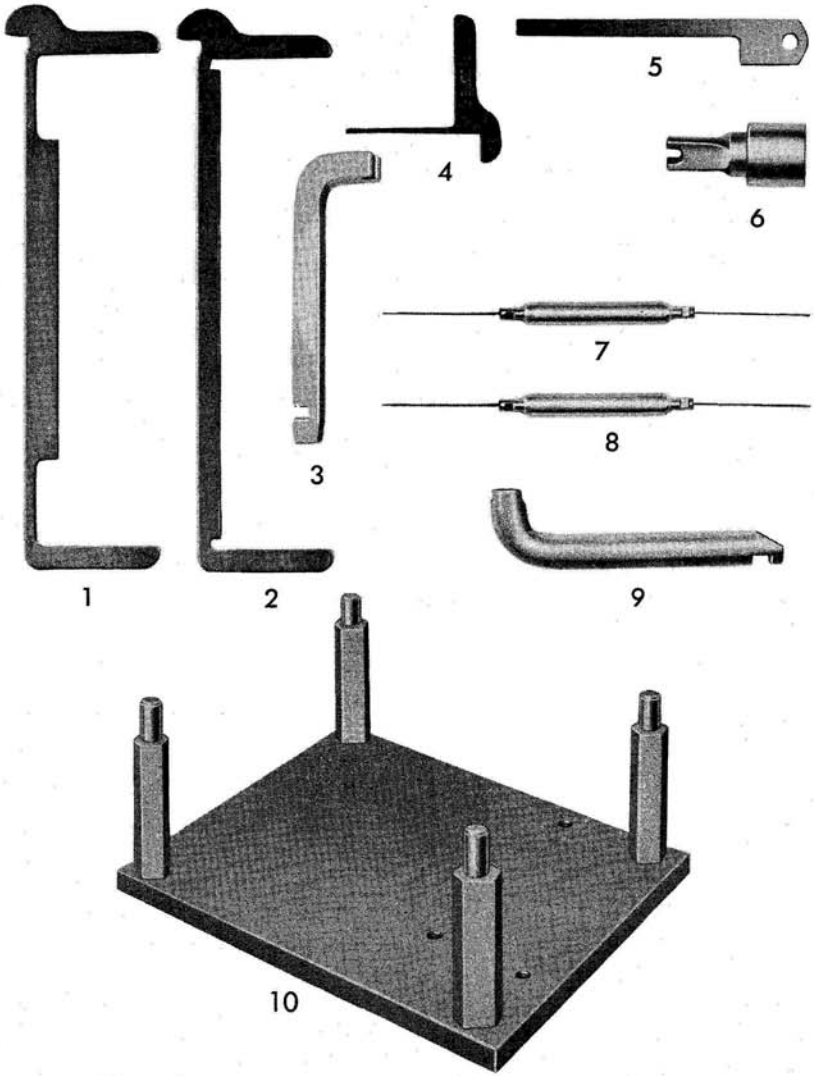

Fig. 36-C Special Tools for Carter 4 Barrel Carburetors

1. J-5457 Primary Float Level Gauge
2. J-5228 Secondary Float Level Gauge
3. J-1137 Fast Idle and Unloader Tool
4. J-6039 Vapor Vent Gauge
5. J-818-3 Pump and Unloader Gauge
6. J-5496 Pump Rod Bending Tool
7. KMO-657 - .015 Throttle Valve Wire Gauge
8. J-1388 - .020 Fast Idle Wire Gauge
9. J-6556 - Fast Idle Bending Tool
10. J-5923 - Carburetor Stand (All Chevrolet 4 Barrel Carburetors)

(All tools with exception of J-5923 base are part of Kit J-6040.)

www.carburetor-manual.com

SPECIFICATIONS

Carburetor	Carter
Part No.	2366SA
Throttle Bore	
Primary	1 5/16"
Secondary	1 5/16"
Main Venturi	
Primary	1 1/16"
Secondary	15/16"
Small Venturi	
Primary	9/32"
Secondary	9/32"
Low Speed Jets	
Idle Needle Orifice	.0595"
Primary	.031"
Main Metering Jets	
Primary	.091"
Secondary	.054"
Metering Rods	
Economy Step	.071"
Power Step	.055"
Float Setting	(Gasket Removed) Casting to Float Top
Primary	1/8"
Secondary	1/4"
Choke Setting	On index
Accelerator Pump	
Capacity - 10 Strokes	18.5cc to 21.5cc
Idle By-Pass	
Fixed Orifice	.113" to .119"
Idle Mixture Screws	
(Turns Open)	1/4 to 1 1/4
Idle Speed - Standard	450 in Drive
Powerglide	425 in Drive

www.carburetor-manual.com

CARTER WCFB CARBURETOR DUAL INSTALLATION

GENERAL DESCRIPTION AND OPERATION

The Carter carburetors used on engines with dual four barrel carburetors differ from those used on single four barrel carburetor equipped engines. An additional set of throttle valves is incorporated in the secondary bores of each carburetor to give better performance at lower speeds. Also, a new form of idle adjustment is made through the use of an idle by-pass screw which replaces the idle speed screw. Operations of these innovations are thoroughly explained in the following descriptions.

AUXILIARY THROTTLE VALVE OPERATION

Throttle valves in the secondary side of the carburetor remain closed until the primary throttle valves have been opened a predetermined amount (Fig. 2-DC). They arrive at wide open throttle position at the same time the primary throttles do. This is accomplished by linkage between the throttle levers. The second set of counterweighted offset throttle valves mounted above the secondary throttle valves are called "Auxiliary Throttle Valves". Air velocity through the carburetor controls the position of the auxiliary throttle valves. When the accelerator is fully depressed, only the primary high-speed system will function until there is sufficient air velocity to overcome the weight of the counterweight on the auxiliary throttle lever and open the auxiliary throttle valves. When this occurs, fuel will also be supplied through the secondary high-speed system.

The secondary throttle valves on the rear carburetor are locked closed during choke operation, as on previous models, to insure faster cold engine starting and good "warm-up" performance.

IDLE BY-PASS AIR SYSTEM

During engine operation, fuel residue and carbon may collect around conventional throttle valves. If these deposits are excessive, engine idle speed is reduced materially and owner complaints of stalling or engine dying result.

The idle by-pass air circuit provides air necessary to supplement the fuel-air mixture furnished by the low speed circuit. The throttle valves are seated (tightly closed) in the bores during hot engine

www.carburetor-manual.com

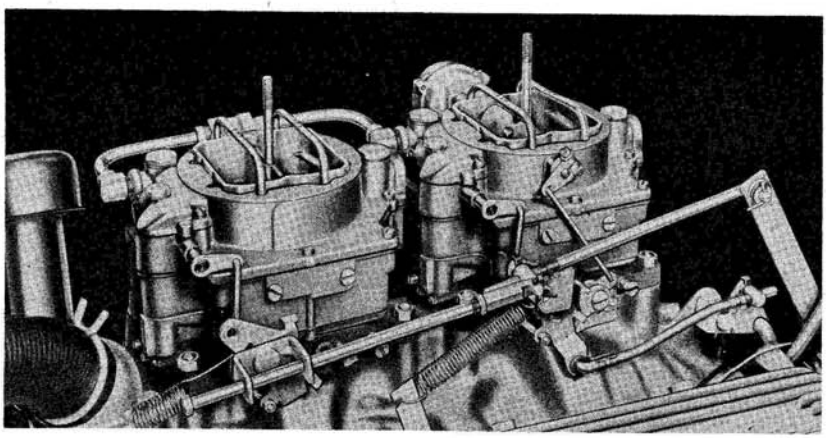

Fig. 1-DC Dual Carburetors

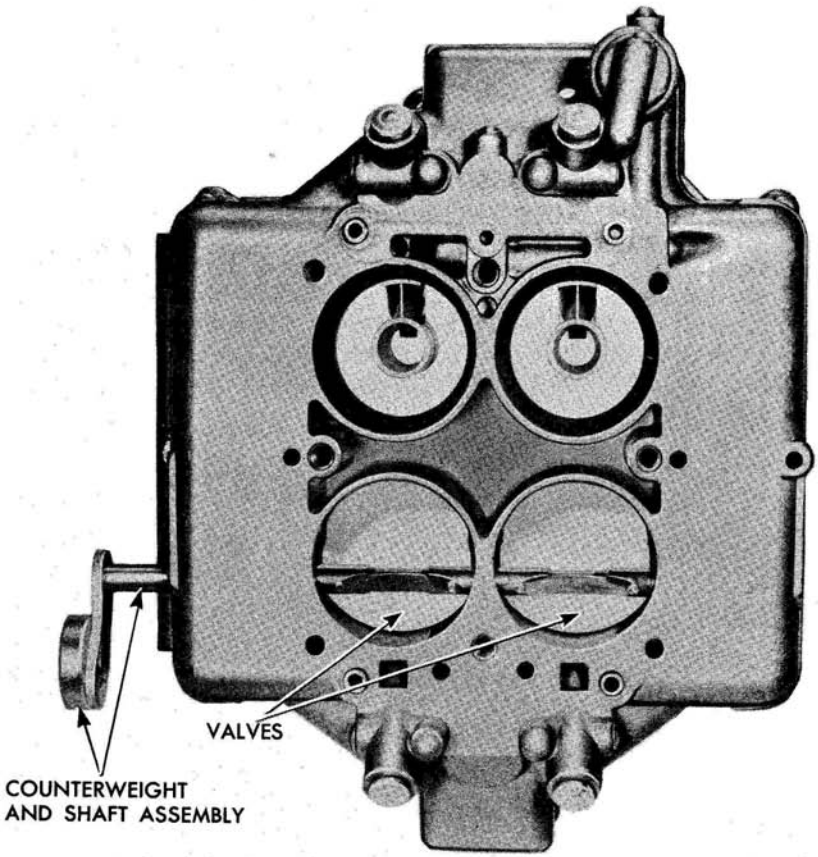

Fig. 2-DC Auxilary Throttle Valves

www.carburetor-manual.com

idle. Since the idle air supply is independent of throttle valve opening, any residue collecting around the valve has much less effect on idle speed. This feature also makes it possible to obtain a smaller amount of air passage at idle then would be possible by opening the primary throttle valves.

Air enters the by-pass idle air passage in the carburetor body through the by-pass idle air inlet hole located at the top of the secondary venturi next to one of the secondary anti-percolator bleed holes. This air is supplied to the secondary throttle bores below the throttle valves. To provide idle speed adjustability, the amount of air necessary for correct engine idle speed is controlled by the air adjustment screw on the side of the carburetor flange (Fig. 3-DC).

In making the idle adjustment on the engine, the air adjustment screw is used to adjust idle speed in a similar manner as the throttle speed screw used previously. Turning the air adjustment screw outward increases engine speed, but also leans the mixture supplied to the manifold which must be compensated for by the adjustment of the idle mixture adjusting screws.

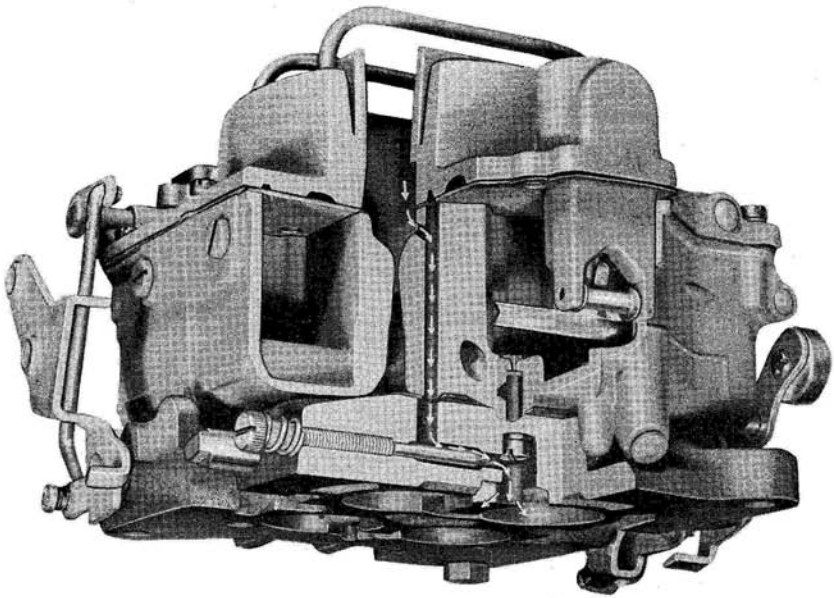

Fig. 3-DC Idle By Pass Air System

www.carburetor-manual.com

CARE, MAINTENANCE AND ADJUSTMENTS

The repair and adjustment procedures characteristic of the Carter carburetor when used on dual-carburetion engines, is covered in the following outline. Reference is made to the single Carter carburetor whenever procedures are the same.

Adjustments On Car

All adjustments listed below can be done without removal of the carburetor from the engine. The adjustments described below should be made in the following sequence:

1. Accelerator Linkage Adjustment
2. Idle Speed and Mixture Adjustment
3. Fast Idle (on Rear Carburetor only)
4. Automatic Choke Adjustment (on Rear Carburetor only)

If trouble is not corrected with the previous adjustments, continue with the following adjustments:

5. Float Level
   Lateral Adjustment
   Vertical Adjustment
6. Float Drop Adjustment
7. Pump Adjustment
8. Metering Rod Adjustment
9. Fast Idle Adjustment (on Rear Carburetor only)
10. Unloader Adjustment (on Rear Carburetor only)
11. Bowl Vapor Vent Adjustment
12. Secondary Throttle Lever Adjustment
13. Secondary Throttle Lock-Out Adjustment
    Repeat adjustment 1, 2 and 3.

Accelerator Linkage Adjustment (Fig. 4-DC)

1. Remove carpet adjacent to area around accelerator pedal to allow for clearance measurement between toe board and accelerator pedal.

www.carburetor-manual.com

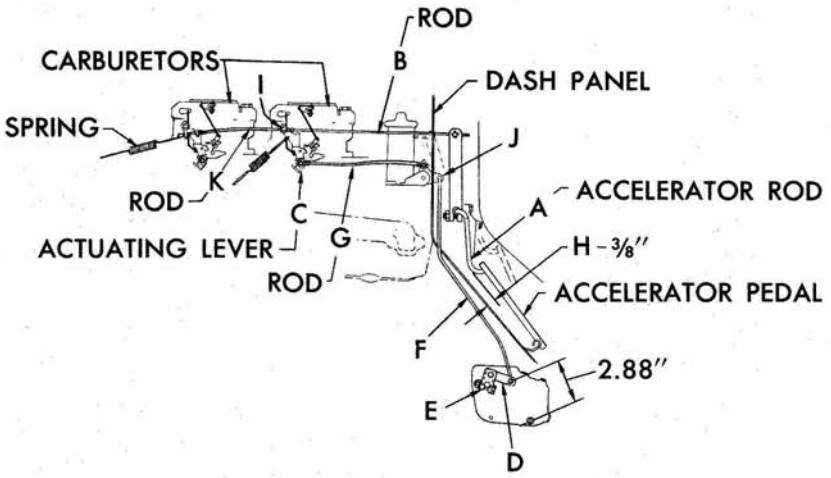

Fig. 4-DC Accelerator Linkage Adjustment

2. Remove air cleaners and throttle pull back springs on both carburetors.

3. With rear carburetor on wide open throttle, accelerator pedal should be 3/8" from toe board. Lengthen or shorten rear accelerator rod by removing spring clip and turning trunnion nut.

4. With rear carburetor on wide open throttle, adjust front carburetor control shaft till throttle on front carburetor is wide open and against throttle stop. Tighten lock nut on front control shaft if loosened.

5. When linkage is properly adjusted, front carburetor will being to open when rear carburetor is at approximately half throttle.

6. Reinstall air cleaners.

Idle Speed and Mixture Adjustment

1. Open and close throttle valves several times to make sure valves seat properly.

2. Connect tachometer and vacuum gauge.

www.carburetor-manual.com

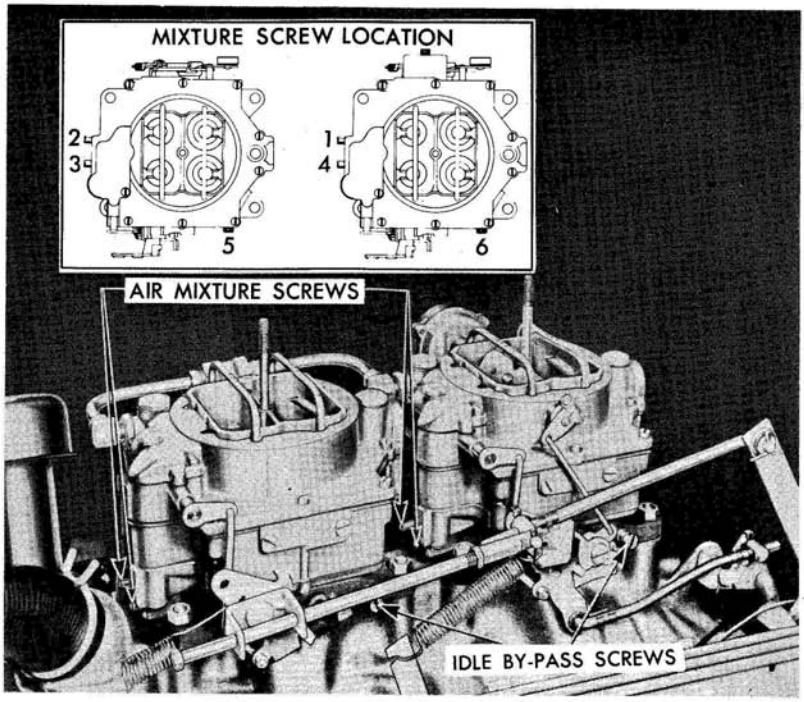

Fig. 5-DC Idle and Mixture Screw Location

3. For initial adjustment adjust idle by-pass screws two (2) turns off of seat (Fig. 5-DC), turn each screw equal turns on each carburetor.

4. Adjust 4 air mixture screws individually to their lean limit then back off or enrich one (1) full turn.

5. Start engine and bring to normal operating temperature.

6. Adjust idle by-pass screws (5, 6) together, (equal amount of turns counterclockwise) to achieve 600 RPM. (On models equipped with Powerglide, selector lever must be in Drive (DR) and Brake Set).

7. Adjust mixture screw number 1 on rear carburetor (Fig. 5-DC) until highest vacuum reading or best engine "feel" and highest engine RPM is obtained.

8. Repeat operation on number 2, 3 and 4 mixture screws.

www.carburetor-manual.com

9. Readjust idle by-pass screws in both carburetors to set idle speed at 600 RPM.

   NOTE: Idle by-pass screws must be turned equal turns.

10. After smooth idle is obtained, turn mixture screws 1, 2, 3, and 4, 1/16 to 1/3 turn (1 to 2 flats of screw) clockwise (to lean). This may roughen engine idle but engine will smoothen out after thorough running.

Fast Idle (On Rear Carburetor Only)

Engine should be thoroughly warmed up. Adjust engine to 1800 RPM with idle adjusting tang on high step of fast idle cam on rear carburetor.

NOTE: All adjustments below are the same for dual carburetors as "Adjustments on the Car" for single WCFB Carter carburetors in this booklet on page 51.

Automatic Choke Adjustment

Float Level (Lateral and Vertical Adjustment)

Float Drop Adjustment

Pump Adjustment

Metering Rod Adjustment

Fast Idle Adjustment

Bowl Vapor Vent Adjustment

Unloader Adjustment

Secondary Throttle Lever Adjustment

Secondary Throttle Lockout Adjustment

MAJOR SERVICE OPERATION

Removal

NOTE: Removal of carburetors is done in the same manner as that outlined for single carburetor installation, except for variations necessary to disconnect two carburetors.

www.carburetor-manual.com

Disassembly

NOTE: Follow procedure under "Disassembly" for single WCFB Carter carburetor except as noted below.

REMOVAL OF BOWL COVER UPPER COMPONENTS (REAR CARBURETOR ONLY)

1. Front Carburetor does not have choke parts.

REMOVAL OF BOWL COVER LOWER COMPONENTS

CARBURETOR BODY

NOTE: Under normal service the carburetor body may be cleaned without further disassembly. If it is necessary to remove auxiliary valves proceed with following:

1. File off staked ends of auxiliary valve screws.
2. Remove screws, valves and shaft.

THROTTLE FLANGE

1. Remove idle mixture adjusting screws with springs.
2. Remove by-pass air screw and spring.

NOTE: Under normal service the carburetor flange may be cleaned without further disassembly. If complete disassembly is necessary, perform the remaining steps 3 thru 9 of single WCFB Carter carburetor.

CLEANING AND INSPECTION

NOTE: Follow procedure for cleaning and inspection as outlined for single WCFB Carter carburetor.

Assembly

THROTTLE FLANGE

1. Install the primary and secondary throttle shafts as illustrated in Fig. 6-DC.
2. Install throttle valves with trademark (C in circle) toward idle ports when viewing flange from manifold side. Use new screws.

www.carburetor-manual.com

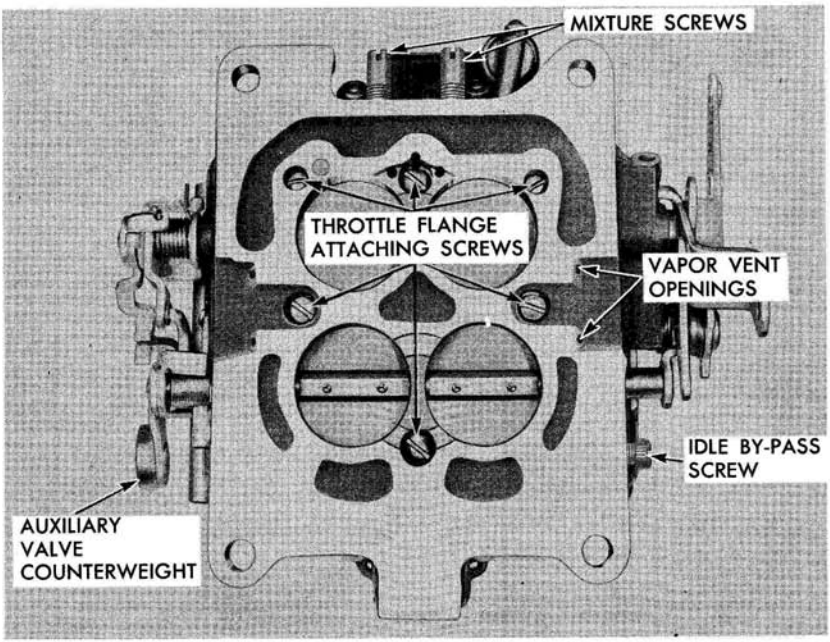

Fig. 6-DC Throttle Flange

3. Install idle mixture adjusting screws and spring finger tight, then back out 1 turn.

   CAUTION: Do not tighten idle mixture adjusting screws more than finger tight.

4. Install secondary throttle return spring and secondary throttle lever.

5. Install secondary throttle washer and screw.

6. Wind spring 1 1/2 turns with tag wire.

7. Install primary shaft thrust washer, inner throttle shaft arm and throttle shaft dog. Hook throttle flex spring on outer throttle lever and throttle shaft dog and install outer lever on primary shaft. Install washer and screw.

8. Using a flat washer on each side of the levers (front carburetor), install connector rod. Retain with pin springs. Rear carburetor uses one (1) flat washer spring and retainer at secondary lever end of rod. Pin spring end does not use a washer. Install rod in upper hole in inner throttle shaft arm.

www.carburetor-manual.com

9. Install fast idle cam assembly, consisting of secondary lockout lever, lower choke lever, fast idle cam and spring and attaching screw as follows:

   a. Assemble fast idle cam and spring assembly and lower choke lever and place over attaching screw and set aside.

   b. Hook secondary lockout lever spring in lockout lever and place lever against boss with spring hooked on casting.

   c. Install fast idle cam assembly with screw (assembled in step 9a) in position on boss. Make sure cam and levers operate freely.

10. Install by-pass air screw and spring, turn all the way in then back out one (1) turn.

11. If auxiliary valves have been removed from bowl body, install shaft and valves using new screws.

    CAUTION: Center valves before tightening screws, valves must close and operate freely.

12. Place new body to flange gasket on carburetor body being sure slot in gasket is lined up with vacumeter passage.

13. Holding auxiliary valves closed, install throttle flange on carburetor body with 6 attaching screws and lock washers.

    CAUTION: Two smaller screws are used on either side of primary bores.

Carburetor Body

BOWL COVER LOWER COMPONENTS

BOWL COVER UPPER COMPONENTS

NOTE: Assembly of carburetor body, bowl cover lower and upper components are the same as for WCFB single Carter carburetor body. The bowl cover upper components for front carburetor do not include steps 8 thru 14 of "Disassembly of Bowl Cover Upper Components".

INSTALLATION

The steps outlined in single WCFB Carter carburetor installation can be followed for dual carburetor installations except for variations necessary to connect the two carburetors. Caution should be observed to connect and tighten properly all fuel line connections. Adjustments 1 to 4 should be performed as outlined in "Adjustment on the Car" of this procedure.

www.carburetor-manual.com